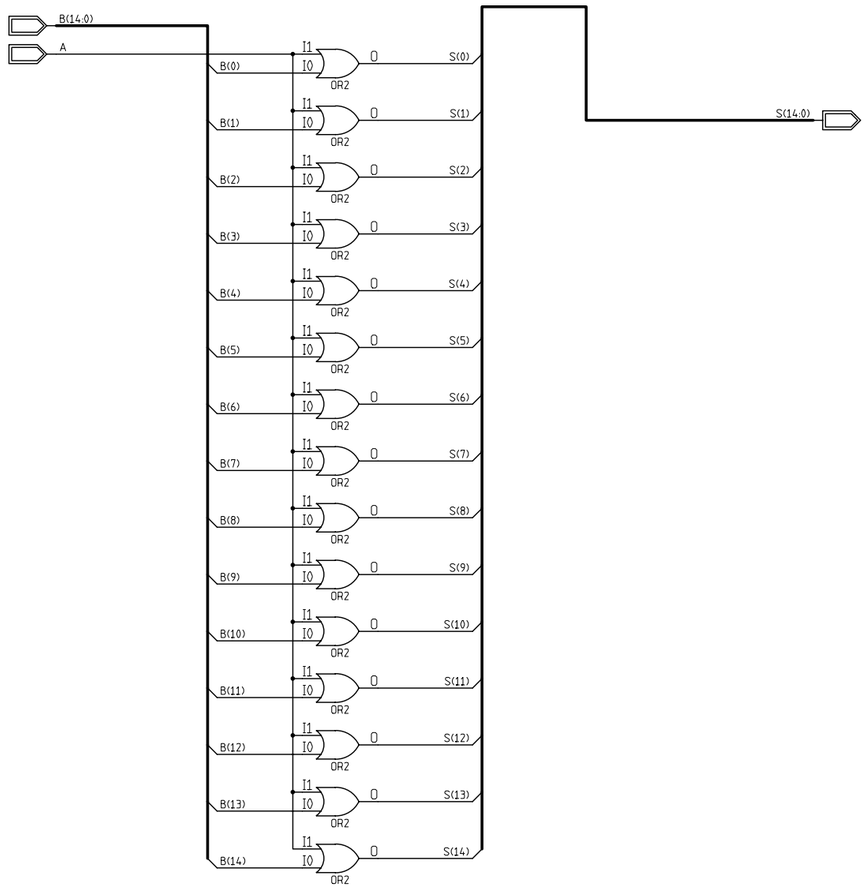

REVISIONS

REV	DESCRIPTION	DATE	APPROVED

CONTRACT NO.				
APPROVALS	DATE			
DRAWN				
CHECKED		SIZE C	FSCM NO.	DWG. NO.	REV
ISSUED		SCALE		SHEET

DWG. NO.

SH.

REV

H=4ND; V=4LA