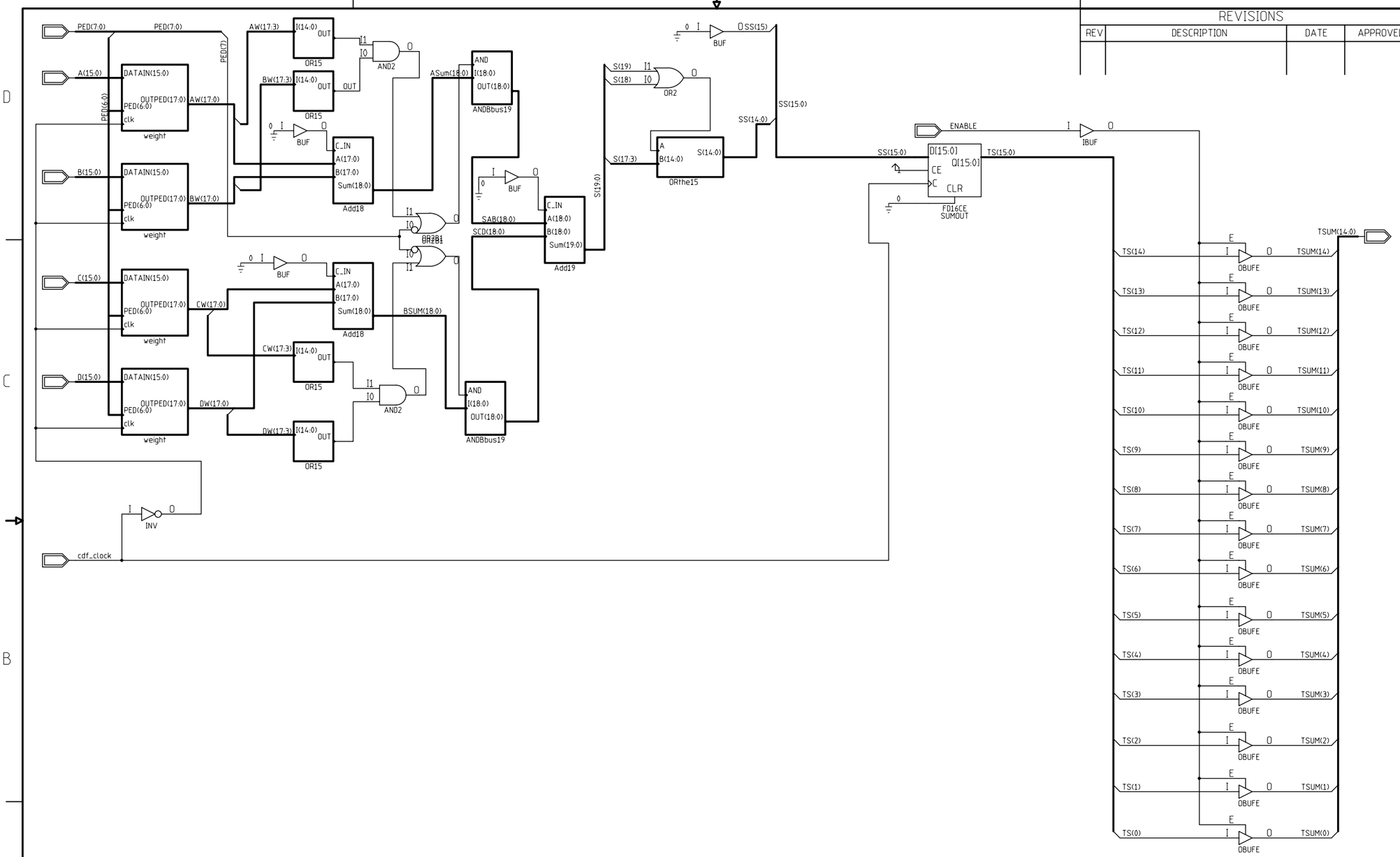

REVISIONS

REV	DESCRIPTION	DATE	APPROVED

CONTRACT NO.		Fermi National Accelerator Laboratory
APPROVALS	DATE	ADMEM Digital Pipeline - TRIGSUM Xilinx Design XC4000
DRAWN Theresa Shaw		
CHECKED		
ISSUED		SIZE C · FSCM NO. · DWG. NO. TMS-PIPELINE-091396-P7 · REV
RD/EED/EES		SCALE · SHEET

DWG. NO. · SH. · REV