REVISIONS			
REV	DESCRIPTION	DATE	APPROVED

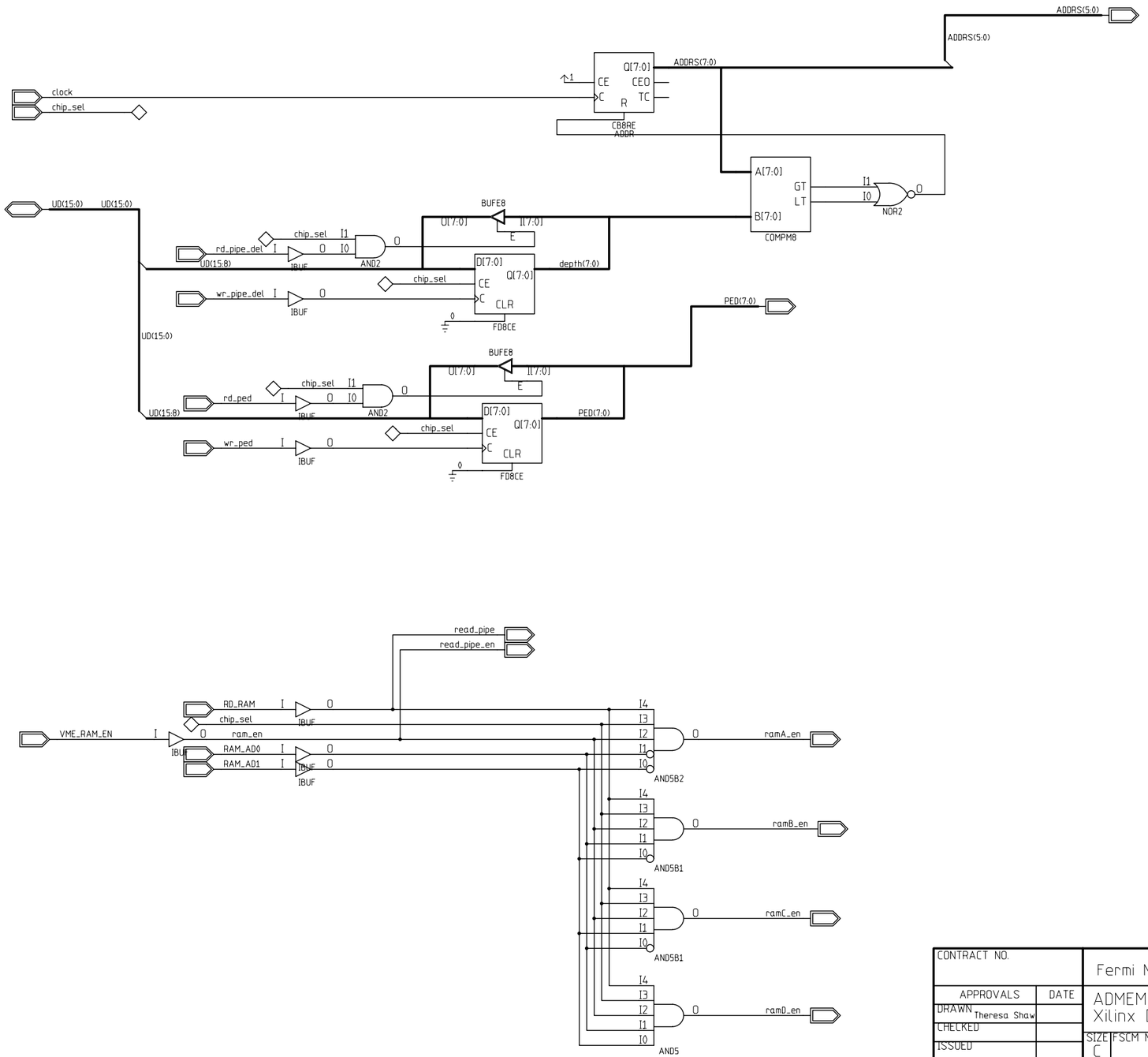

CONTRACT NO.		Fermi National Accelerator Laboratory			
APPROVALS	DATE	ADMEM Digital Pipeline - ADDRESS Xilinx Design XC4000			
DRAWN Theresa Shaw					
CHECKED					
ISSUED		SIZE C	FSCM NO.	DWG NO. TMS-PIPELINE-091396-P5	REV
RD/EED/EES		SCALE		SHEET	

DWG NO.
SH.
REV