REVISIONS			
REV	DESCRIPTION	DATE	APPROVED

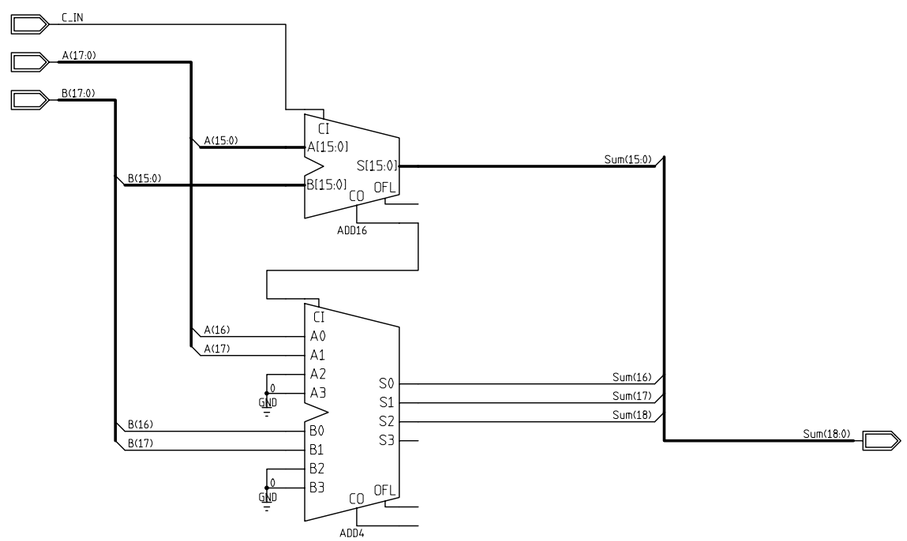

CONTRACT NO.				
APPROVALS	DATE			
DRAWN				
CHECKED		SIZE C	FSCM NO.	DWG. NO.	REV
ISSUED				
		SCALE		SHEET

DWG. NO.
SH.
REV

H=4ND; V=4LA