REVISIONS			
REV	DESCRIPTION	DATE	APPROVED

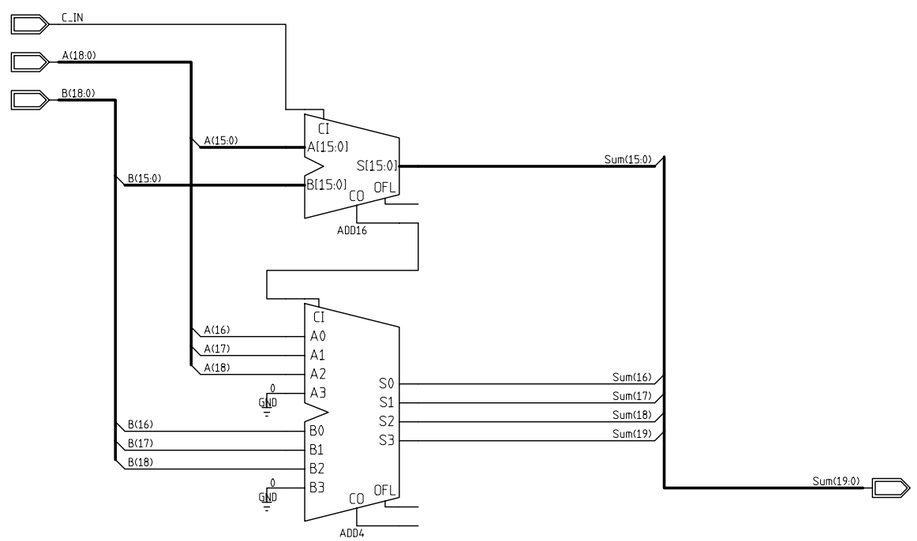

CONTRACT NO.					
APPROVALS	DATE				
DRAWN					
CHECKED		SIZE C	FSCM NO.	DWG. NO.	REV
ISSUED					
		SCALE		SHEET	

DWG. NO.
SH.
REV

H=4ND; V=4LA