REVISIONS			
REV	DESCRIPTION	DATE	APPROVED

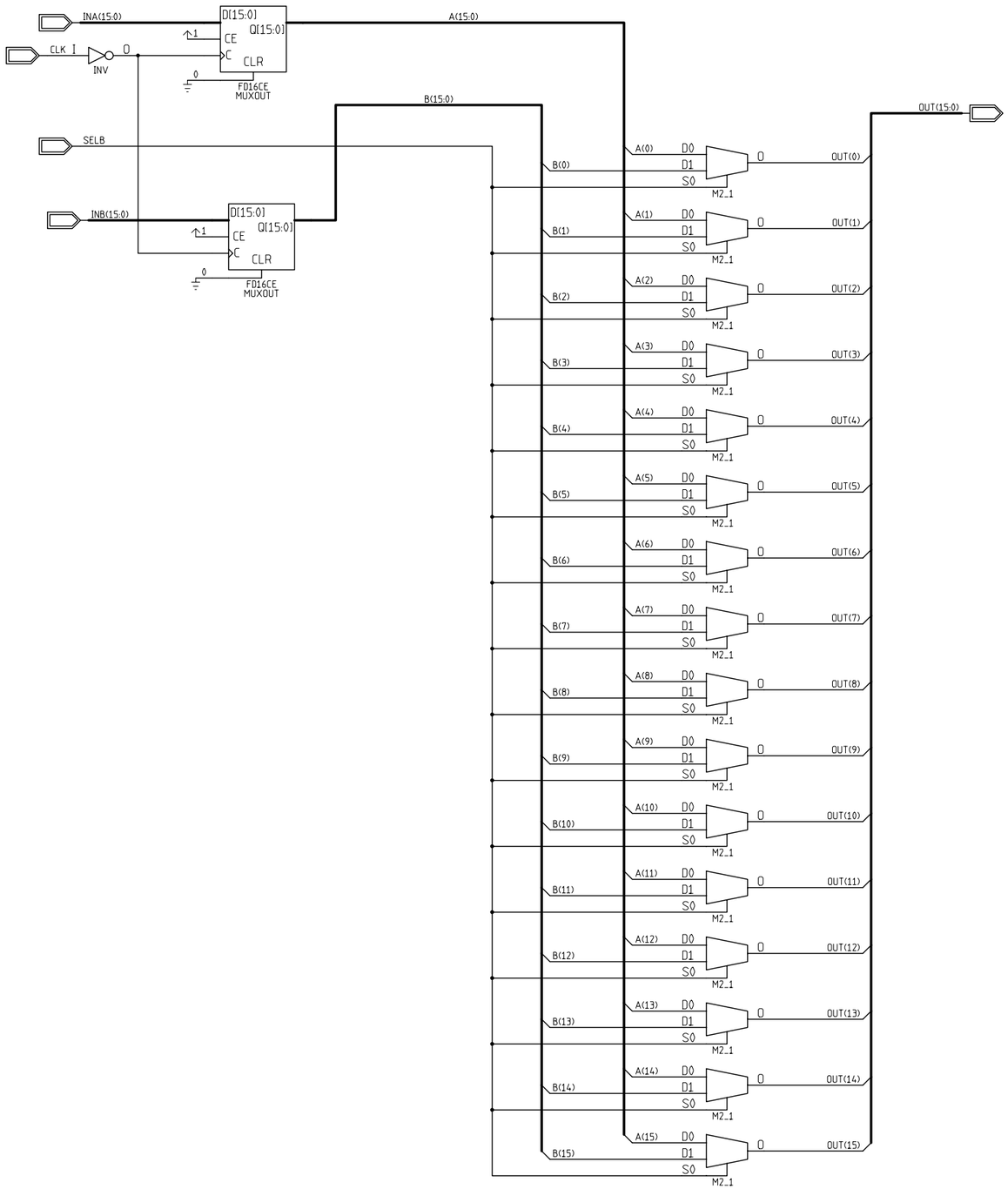

CONTRACT NO.		Fermi National Accelerator Laboratory	
APPROVALS	DATE	ADMEM Digital Pipeline - MUX32_16 Xilinx Design XC4000	
DRAWN Theresa Shaw			
CHECKED		SIZE C / FSCM NO. / DWG NO. TMS-PIPELINE-091396-P6	REV
ISSUED			
RD/EED/EES		SCALE	SHEET

DWG NO.
SH
REV