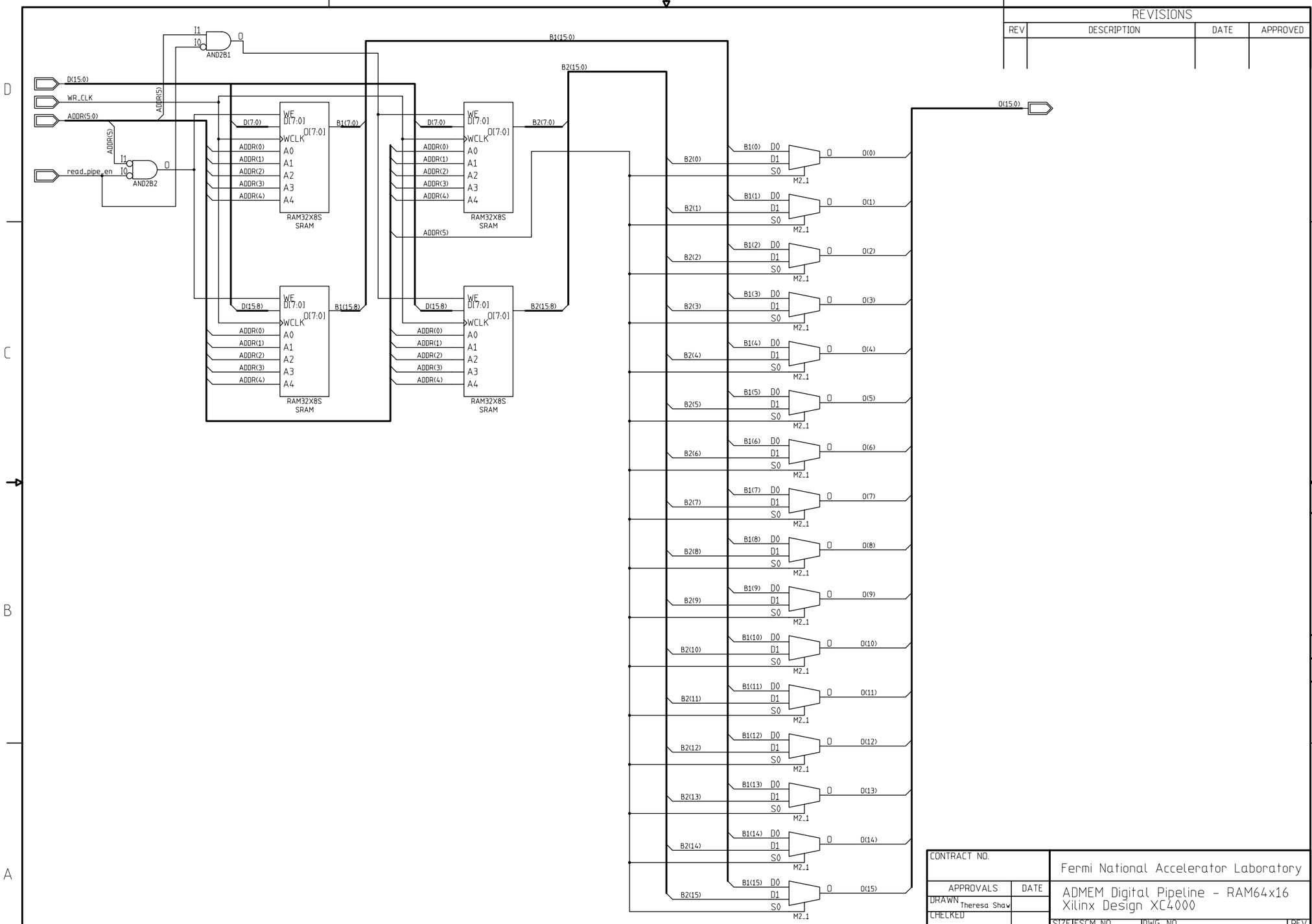

REVISIONS			
REV	DESCRIPTION	DATE	APPROVED

DWG NO.

SH.

REV

CONTRACT NO.		Fermi National Accelerator Laboratory
APPROVALS	DATE	ADMEM Digital Pipeline - RAM64x16 Xilinx Design XC4000
DRAWN Theresa Shaw		
CHECKED		SIZE C · FSCM NO. · DWG NO. TMS-PIPELINE-091396-P8 · REV
ISSUED		
RD/EED/EES		SCALE · SHEET