REVISIONS			
REV	DESCRIPTION	DATE	APPROVED

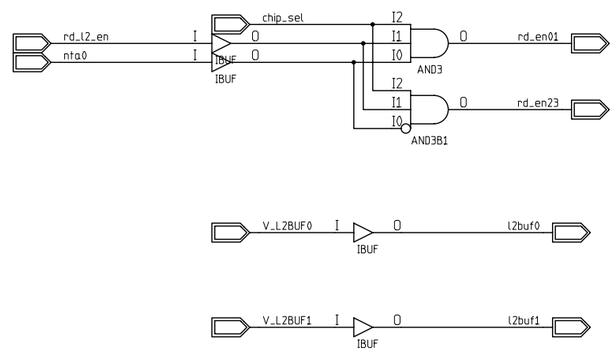

CONTRACT NO.		Fermi National Accelerator Laboratory			
APPROVALS	DATE	ADMEM Digital Pipeline - READOUT Xilinx Design XC4000			
DRAWN Theresa Shaw					
CHECKED		SIZE C	FSCM NO.	DWG NO. TMS-PIPELINE-091396-P9	REV
ISSUED					
RD/EED/EES		SCALE		SHEET	

DWG NO.
SH.
REV