REVISIONS			
REV	DESCRIPTION	DATE	APPROVED

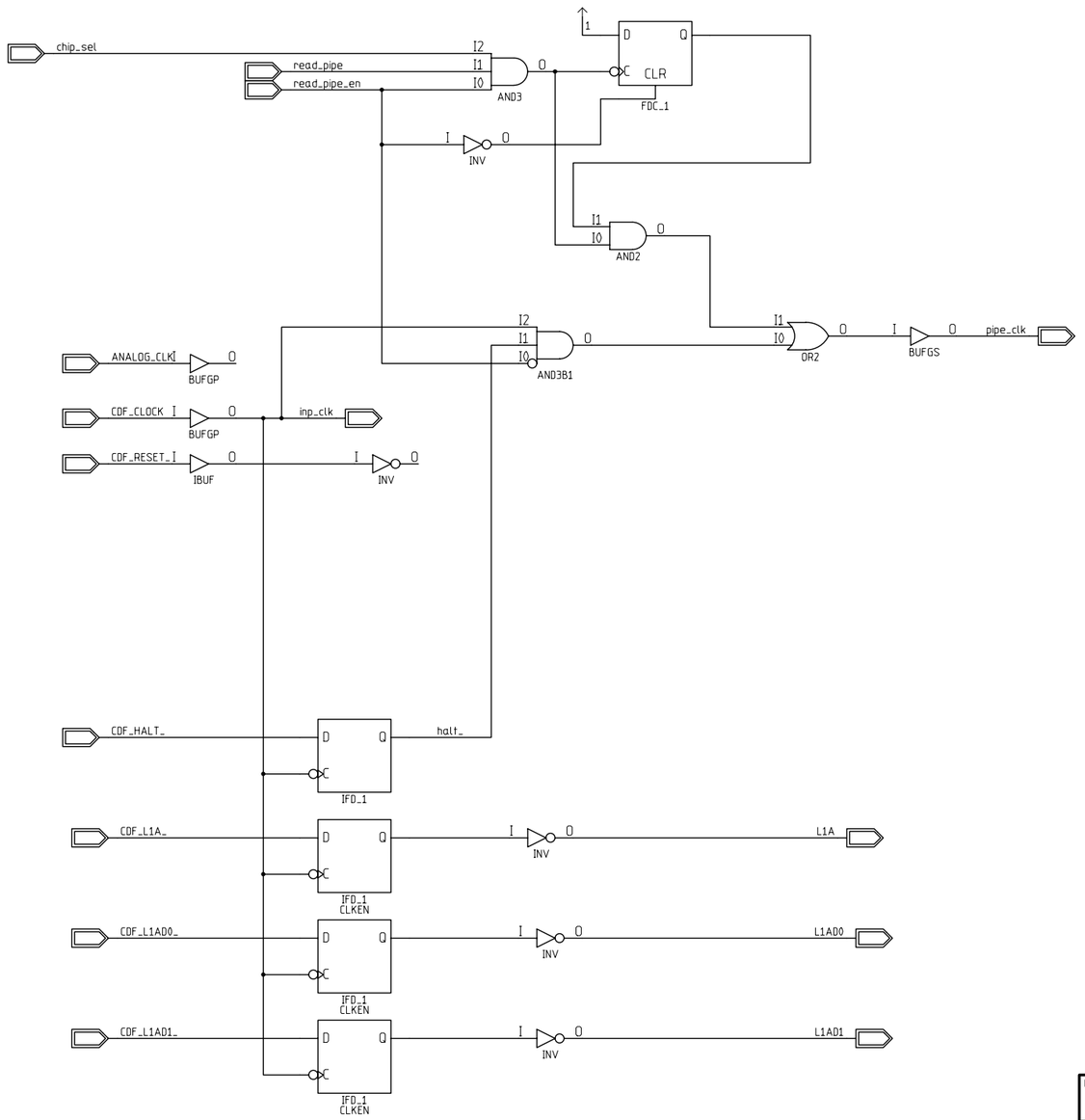

CONTRACT NO.		Fermi National Accelerator Laboratory
APPROVALS	DATE	ADMEM Digital Pipeline - clock_gen Xilinx Design XC4000
DRAWN Theresa Shaw		
CHECKED		
ISSUED		SIZE C / FSCM NO. / DWG NO. TMS-PIPELINE-091396-P4 / REV
RD/EED/EES		SCALE / SHEET

DWG NO.
SH.
REV