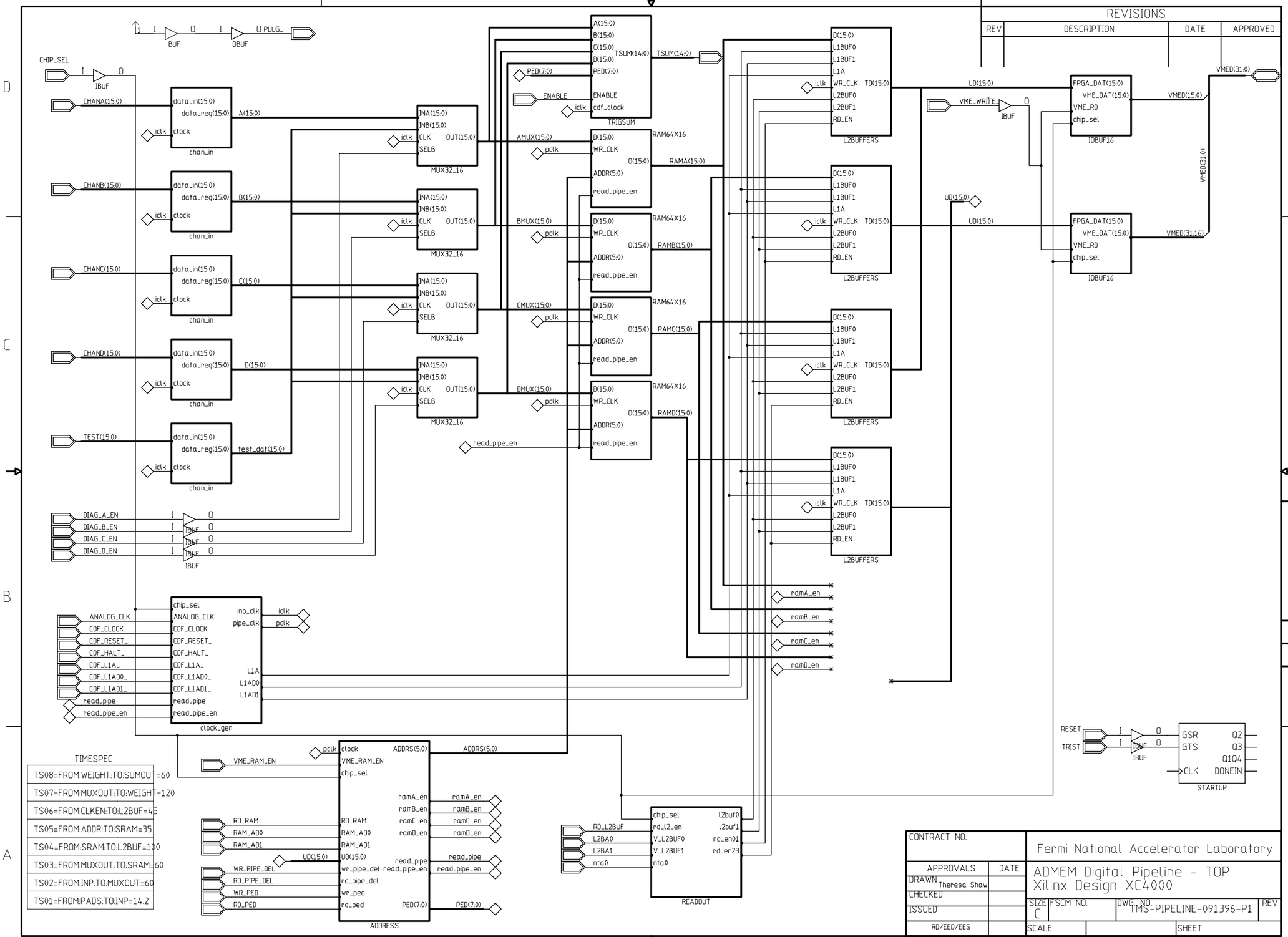

CONTRACT NO.		Fermi National Accelerator Laboratory		
APPROVALS	DATE	ADMEM Digital Pipeline - TOP Xilinx Design XC4000		
DRAWN Theresa Shaw				
CHECKED		SIZE C	FSCM NO.	DWG NO. TMS-PIPELINE-091396-P1	REV
ISSUED				
RD/EED/EES		SCALE		SHEET