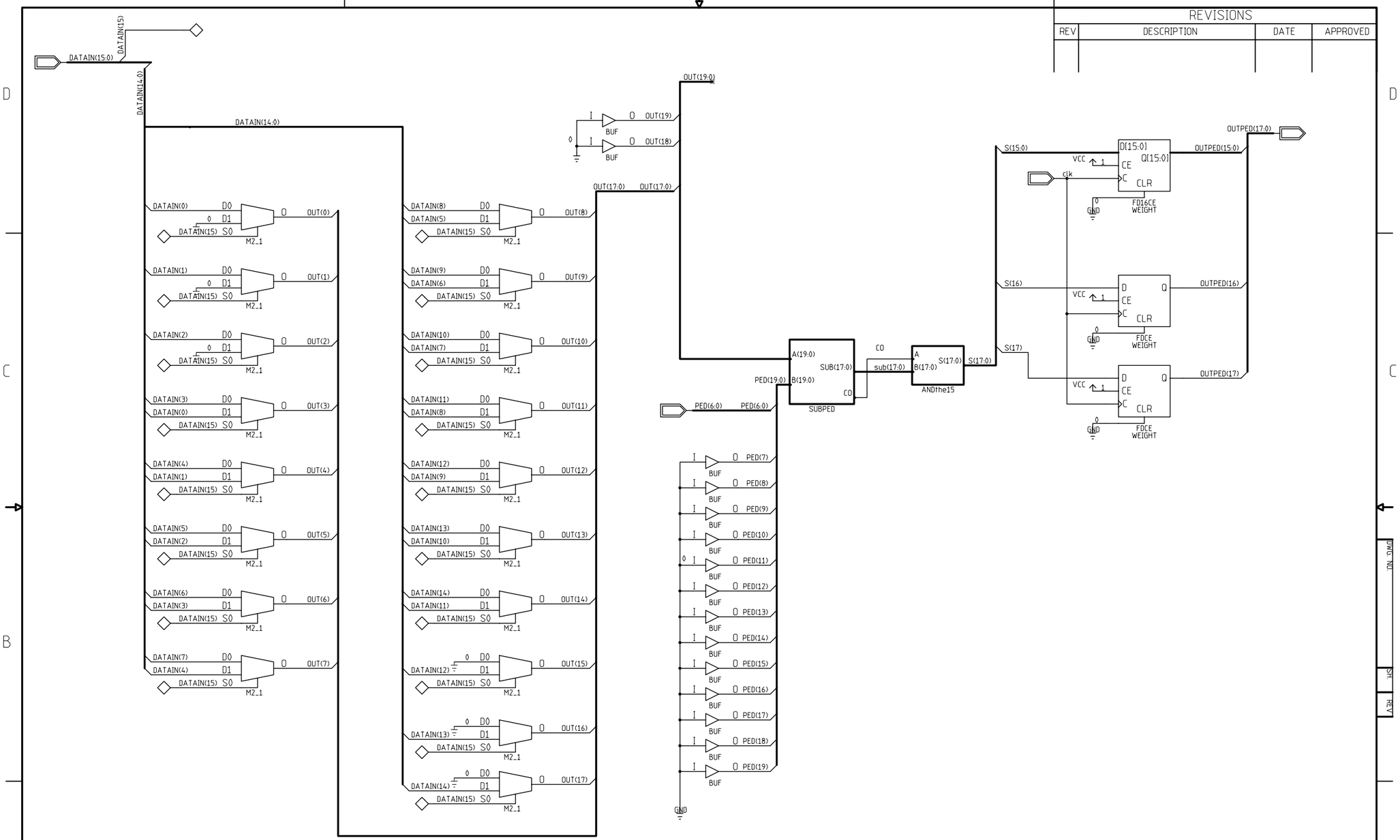

REVISIONS

REV	DESCRIPTION	DATE	APPROVED

CONTRACT NO.	Fermi National Accelerator Laboratory	
APPROVALS / DATE	ADMEM Digital Pipeline - weight Xilinx Design XC4000	
DRAWN Theresa Shaw		
CHECKED	SIZE C / FSCM NO. / DWG. NO. TMS-PIPELINE-091396-P7A / REV	
ISSUED		
RD/EED/EES	SCALE / SHEET	

DWG. NO. SH. REV