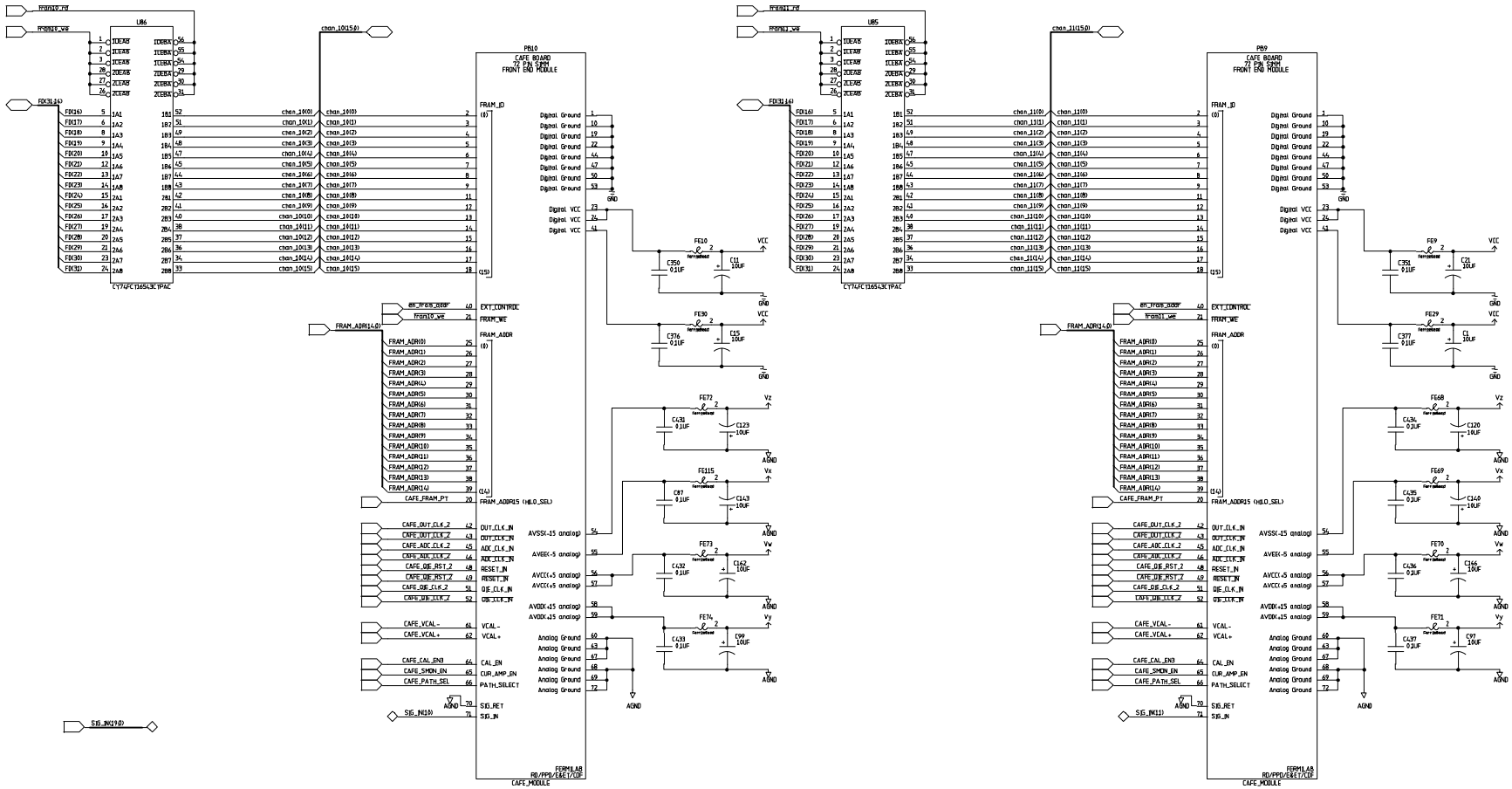

ENG NO	SN	REV

REVISIONS

REV	DESCRIPTION	DATE	APPROVED

CDF
UPGRADE
ELECTRONICS

Fermi National Accelerator Lab

ADMEM - Production_V4
Channels 10 and 11
CAFE Card connections

Theresa M. Shaw

RD/EED/EES

SIZE	FSCM NO	ENG NO	REV
D		TMS-ADMEM-021999-P11	A

SCALE

SHEET 11 of 25