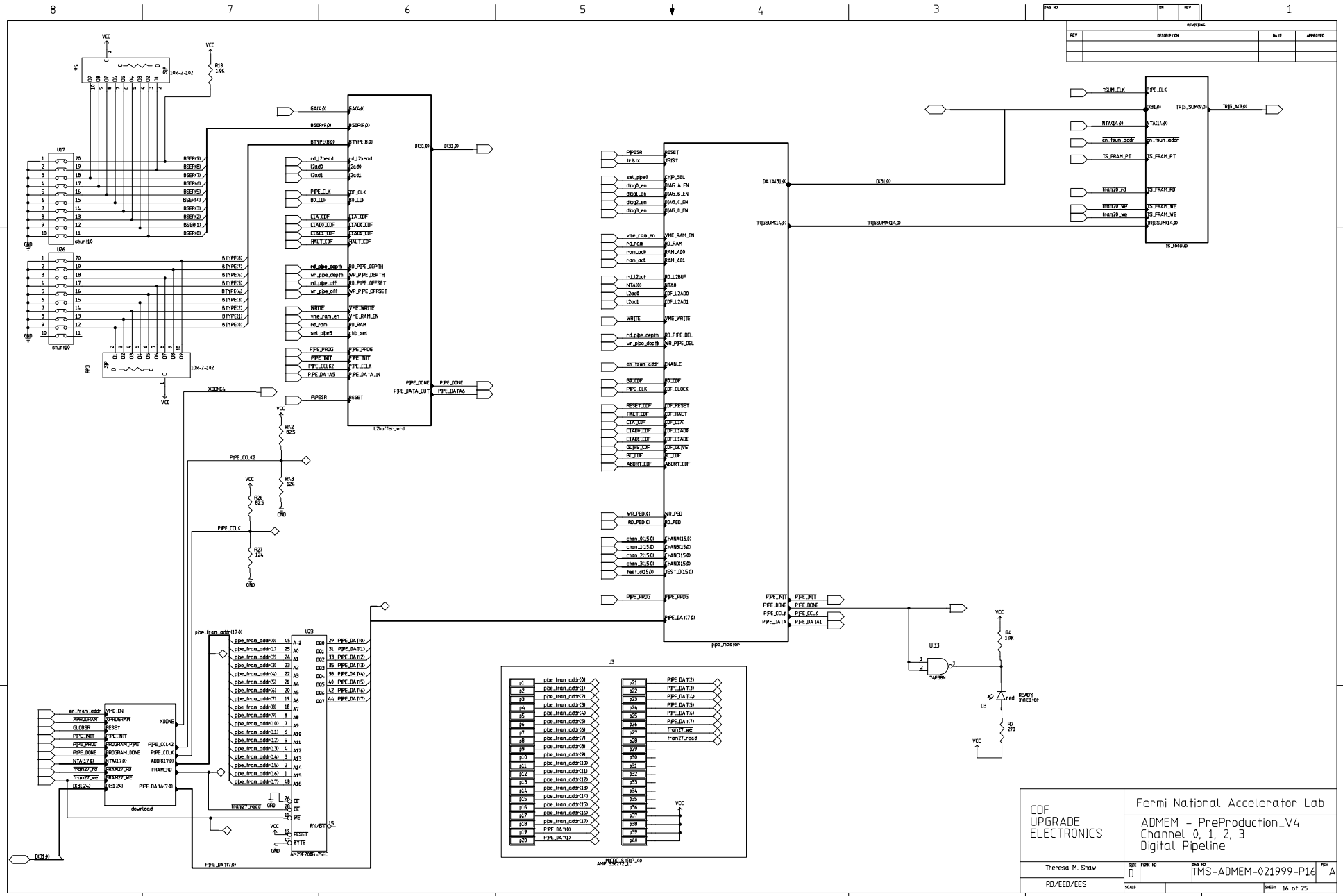

REV	DESCRIPTION	DATE	APPROVED

REVISIONS

CDF UPGRADE ELECTRONICS	Fermi National Accelerator Lab ADMEM - PreProduction_V4 Channel 0, 1, 2, 3 Digital Pipeline
Theresa M. Shaw	SIZE D · DWG NO TMS-ADMEM-021999-P16 · REV A
RD/EED/EES	SCALE · SHEET 16 of 25