DWG NO	SH	REV

REVISIONS

REV	DESCRIPTION	DATE	APPROVED

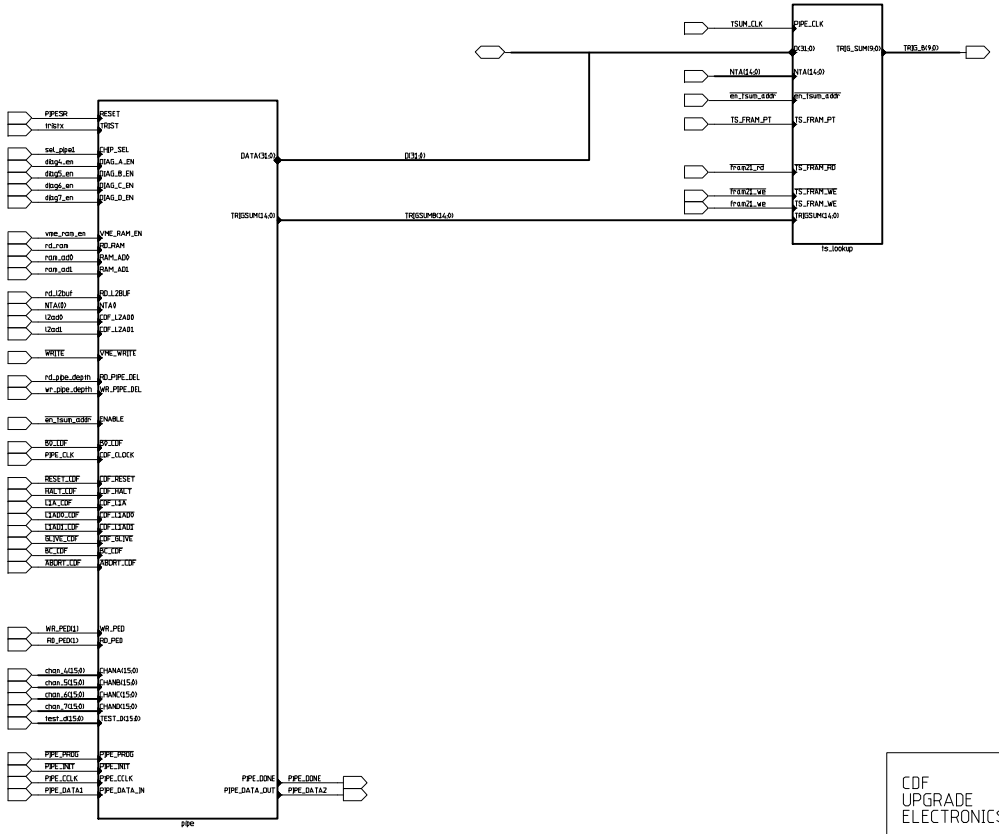

CDF UPGRADE ELECTRONICS	Fermi National Accelerator Lab ADMEM - PreProduction Channel 4, 5, 6, 7 Digital Pipeline			
Theresa M. Shaw	SIZE D	FSHC NO	DWG NO TMS-ADMEM-041597-P17	REV A
RD/EED/EES	SCALE		SHEET 17 of 25	