DWG NO	SH	REV

REVISIONS

REV	DESCRIPTION	DATE	APPROVED

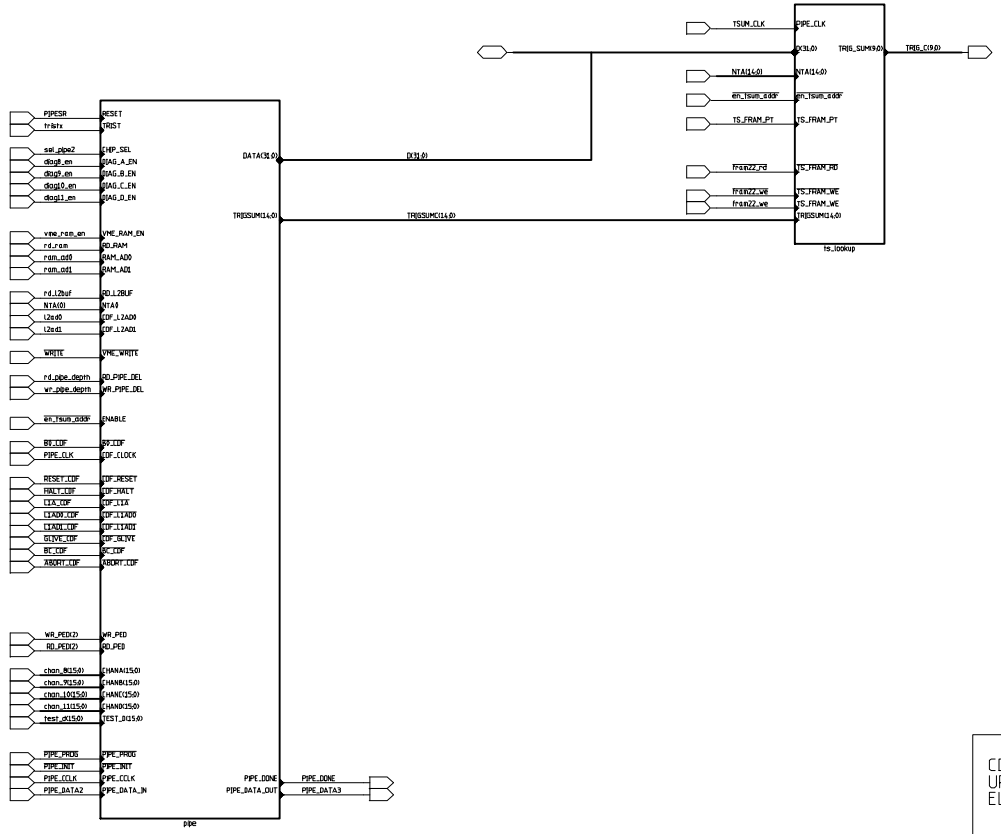

CDF UPGRADE ELECTRONICS	Fermi National Accelerator Lab ADMEM - PreProduction_V4 Channel 8, 9, 10, 11 Digital Pipeline			
Theresa M. Shaw	SIZE D	FSHC NO	DWG NO TMS-ADMEM-021999-P18	REV A
RD/EED/EES	SCALE		SHEET 18 of 25	