| DWG NO | SH | REV |
|---|---|---|
| | | |

REVISIONS

| REV | DESCRIPTION | DATE | APPROVED |
|---|---|---|---|
| | | | |
| | | | |
| | | | |

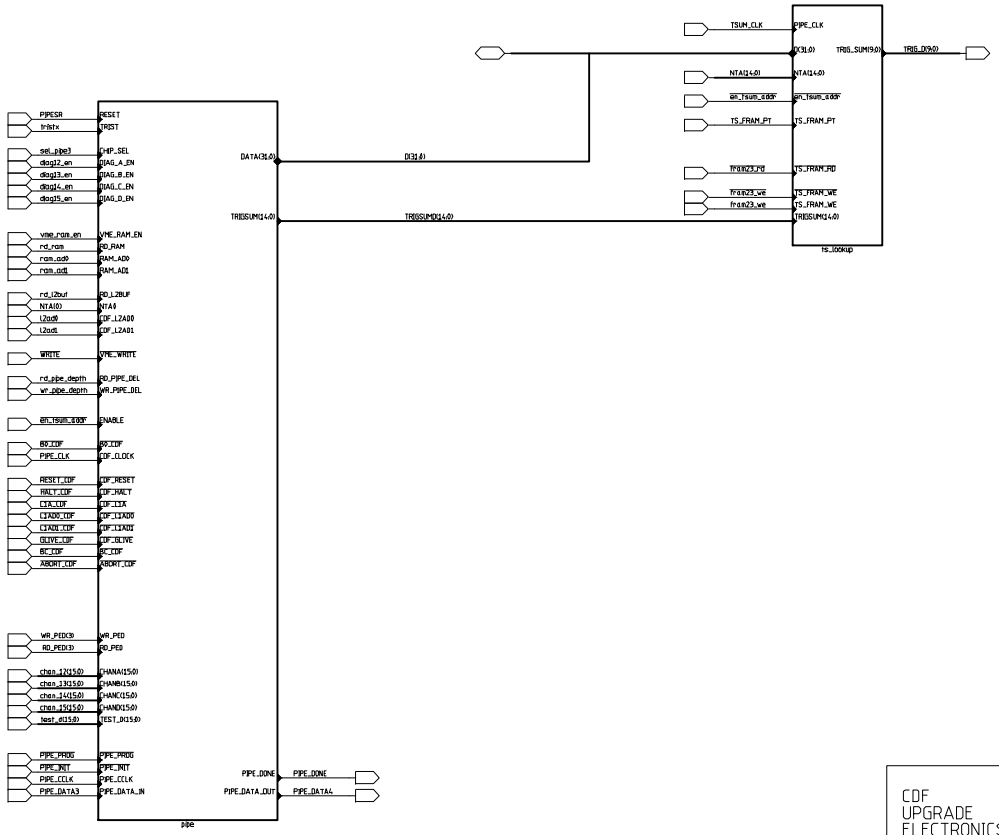


| | | | |
|---|---|---|---|
| CDF UPGRADE ELECTRONICS | Fermi National Accelerator Lab | | |
| | ADMEM - PreProduction_V4<br>Channel 12, 13, 14, 15<br>Digital Pipeline | | |
| Theresa M. Shaw | SIZE D | FSCM NO | DWG NO TMS-ADMEM-021999-P19 | REV A |
| RD/EED/EES | SCALE | | SHEET 19 of 25 |