DWG NO	SH	REV

REVISIONS

REV	DESCRIPTION	DATE	APPROVED

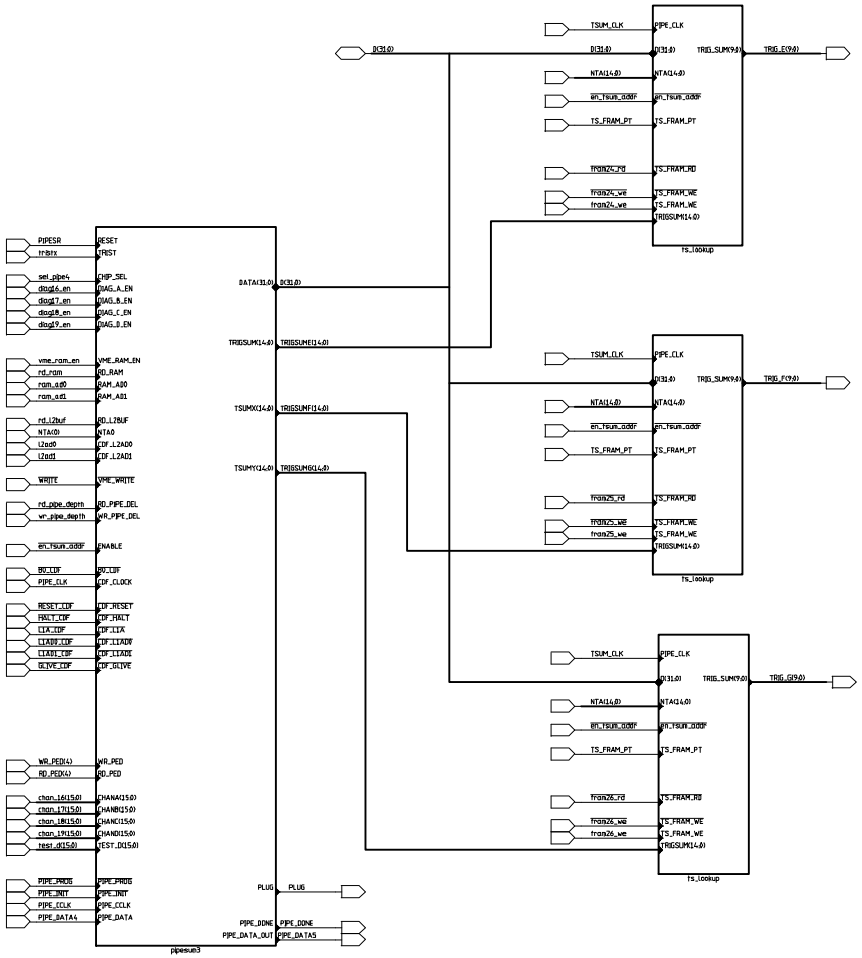

CDF UPGRADE ELECTRONICS	Fermi National Accelerator Lab ADMEM - PreProduction_V4 Channel 16, 17, 18, 19 Digital Pipeline		
Theresa M. Shaw	SIZE D	FSHC NO	DWG NO TMS-ADMEM-021999-P20	REV A
RD/EED/EES	SCALE		SHEET 20 of 24