DWG NO	SH	REV

REVISIONS

REV	DESCRIPTION	DATE	APPROVED

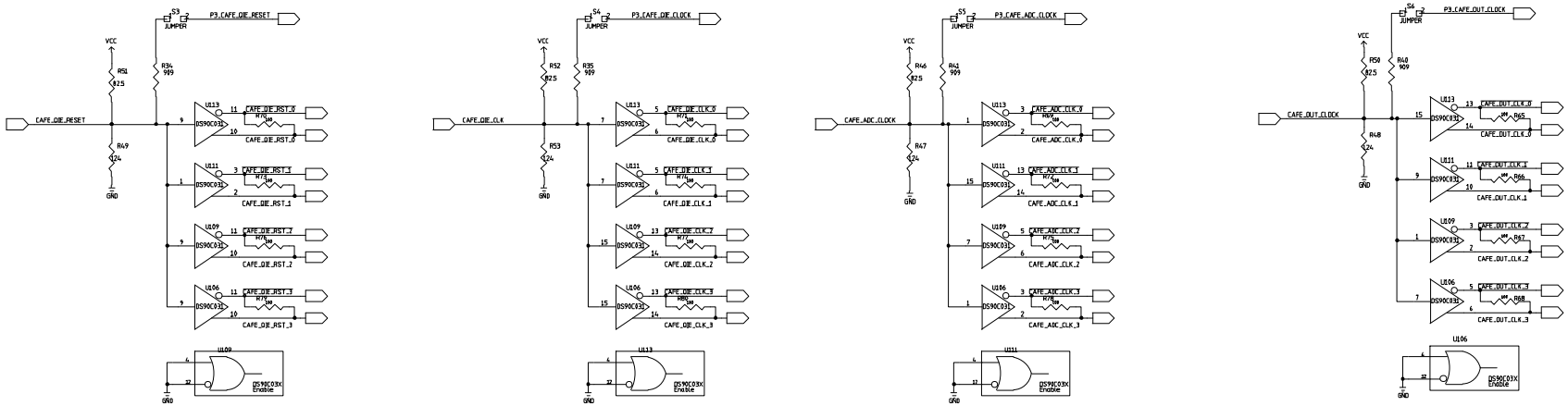

CDF UPGRADE ELECTRONICS	Fermi National Accelerator Lab		
	ADMEM - Production_V4 CAFE Card Services		
Charlie N. 7/15/97	SIZE D	FSMC NO	DWG NO TMS-ADMEM-021999-P23 REV A
RD/EED/EES	SCALE		SHEET 23 of 25