DWG NO	SH	REV

REVISIONS

REV	DESCRIPTION	DATE	APPROVED

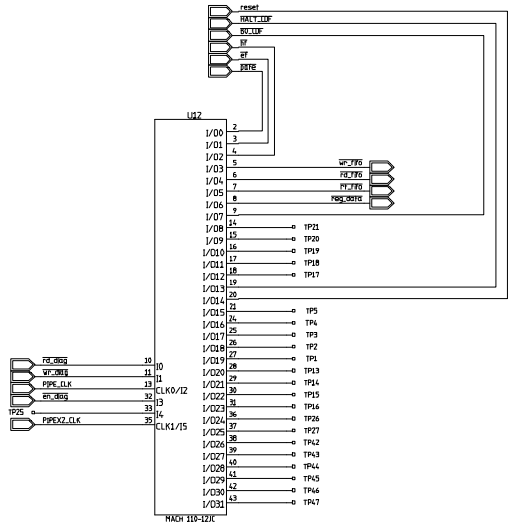

CDF UPGRADE ELECTRONICS	Fermi National Accelerator Lab		
	ADMEM - Production Diagnostic Data Sequencer		
Theresa M. Shaw	SIZE D	FSMC NO	DWG NO TMS-ADMEM-012098-P5A REV A
RD/EED/EES	SCALE		SHEET 1 of 1