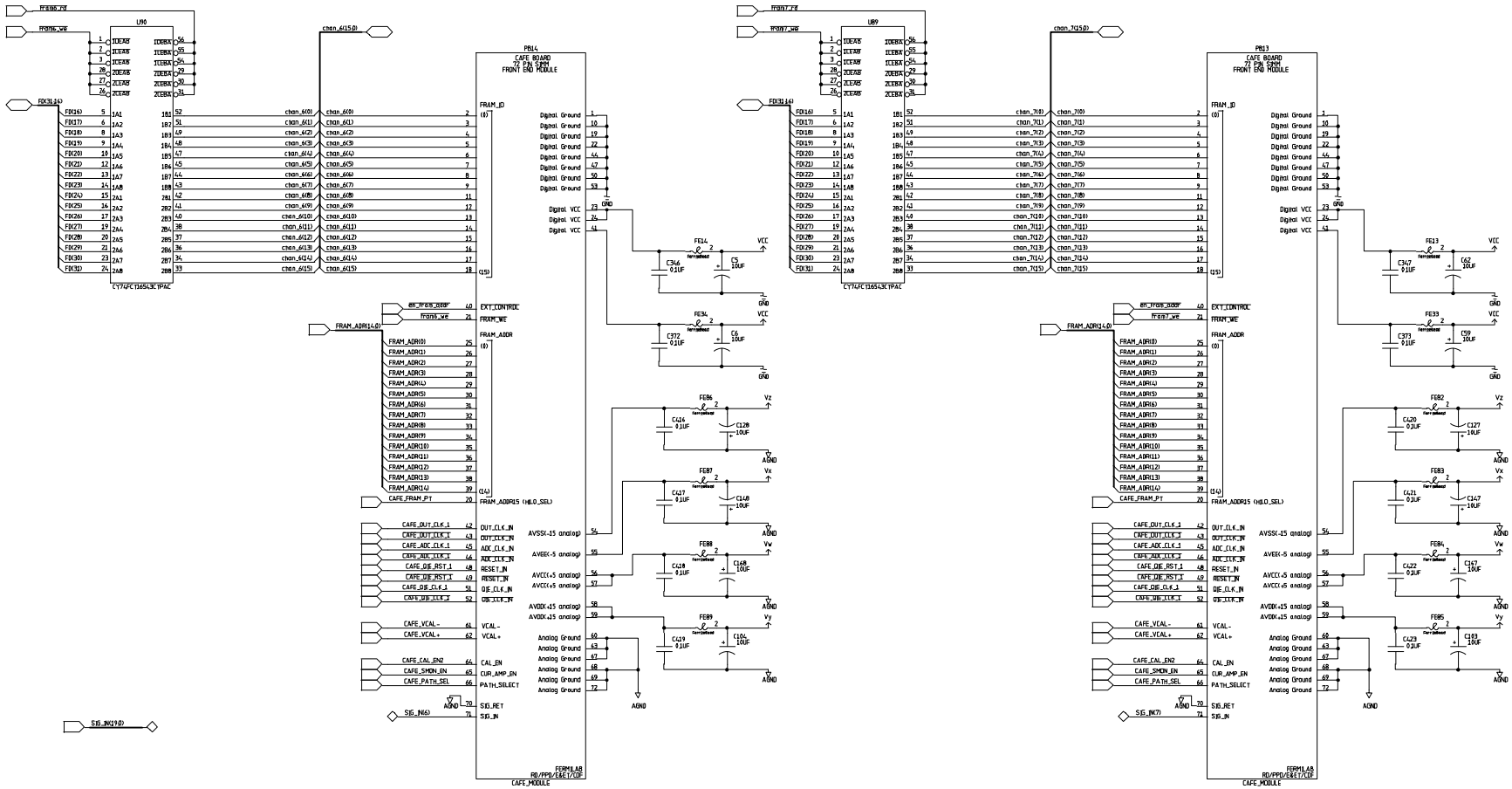

REV	DESCRIPTION	DATE	APPROVED

CDF
UPGRADE
ELECTRONICS

Fermi National Accelerator Lab

ADMEM - Production_V4
Channels 6 and 7
CAFE Card connections

Theresa M. Shaw

RD/EED/EES

SIZE D | FSCM NO | DWG NO TMS-ADMEM-021999-P9 | REV A

SCALE | SHEET 9 of 25