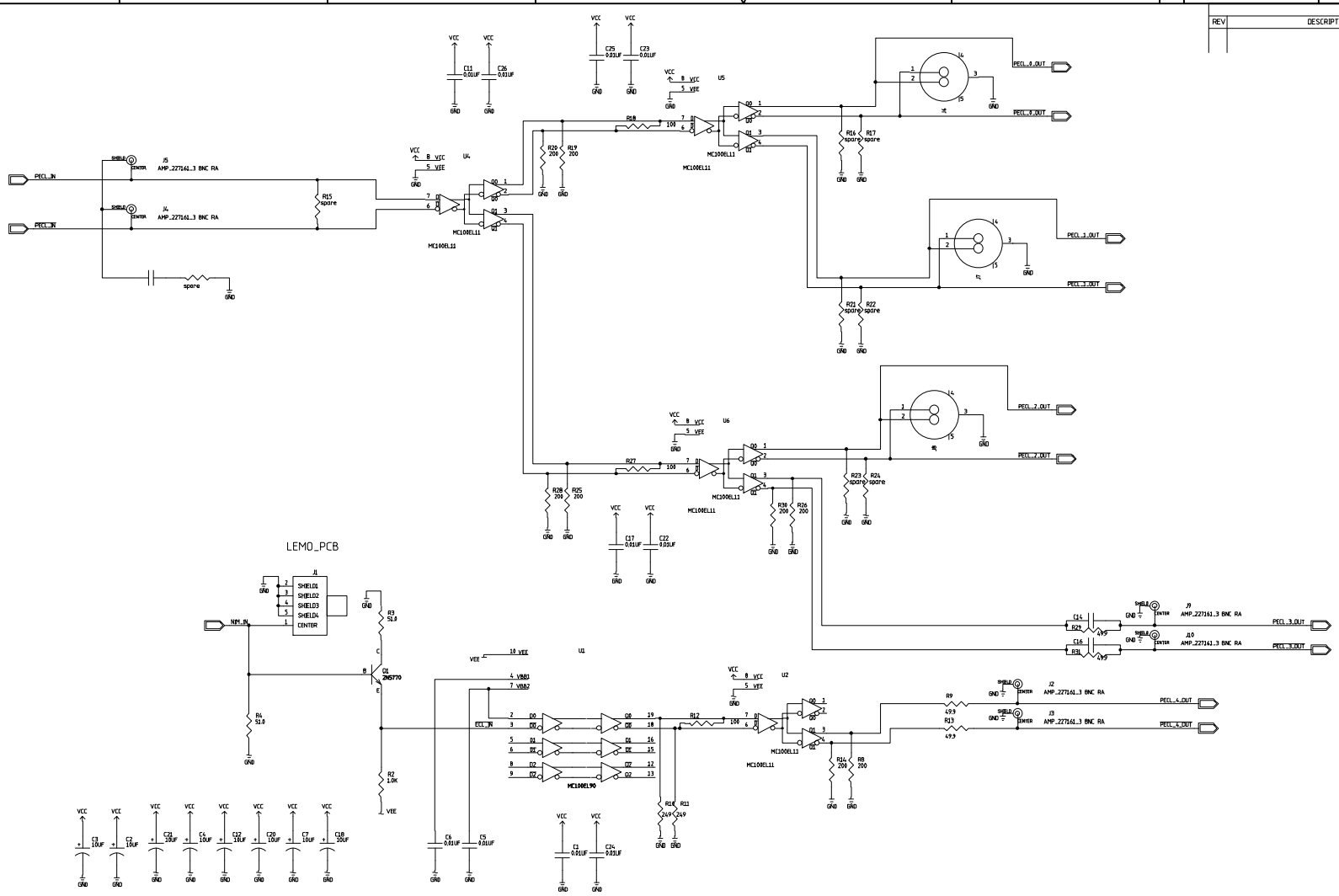

DWG. NO.	SH.	REV

REVISIONS

REV	DESCRIPTION	DATE	APPROVED

CONTRACT NO.		
APPROVALS	DATE	4:1 Fanout Module
DRAWN T. Shaw	5/3/99	Differential PECL Fanout
CHECKED		
ISSUED		

SIZE	FSCM NO.	DWG. NO.	REV
D			
SCALE		SHEET	