REVISIONS			
REV	DESCRIPTION	DATE	APPROVED
	X2		

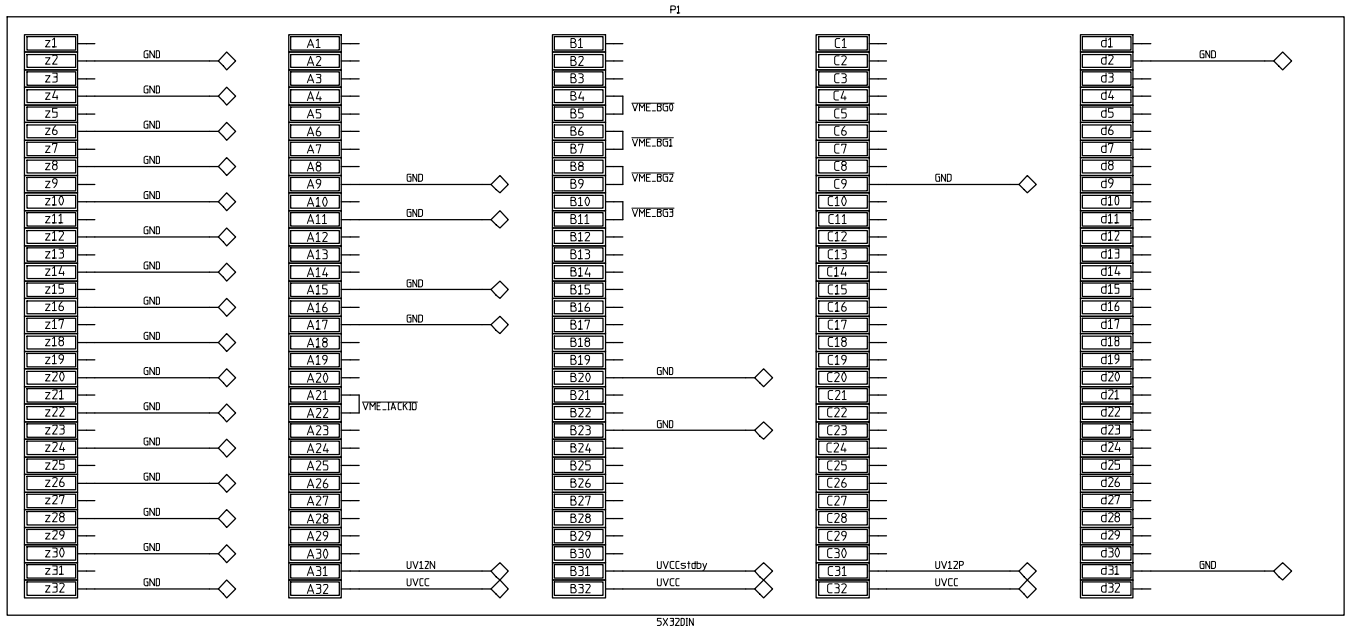

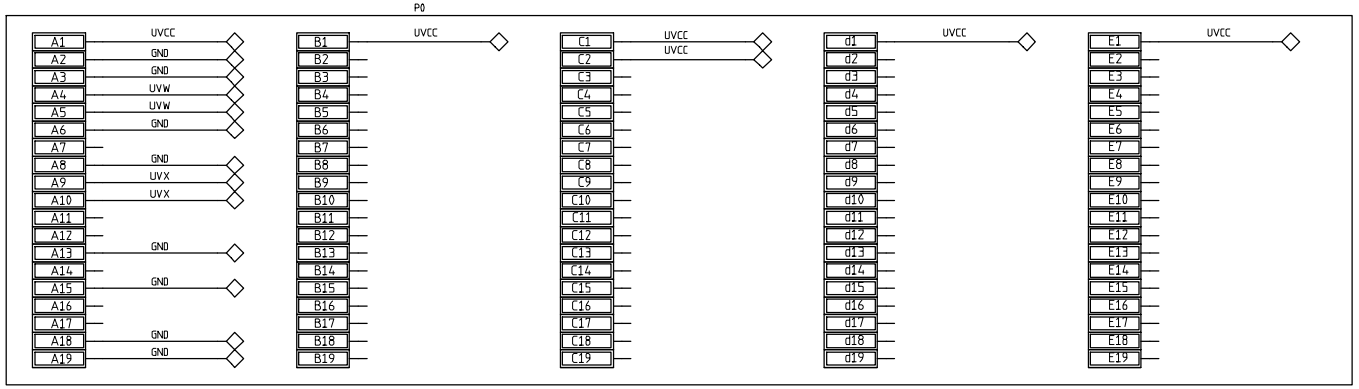

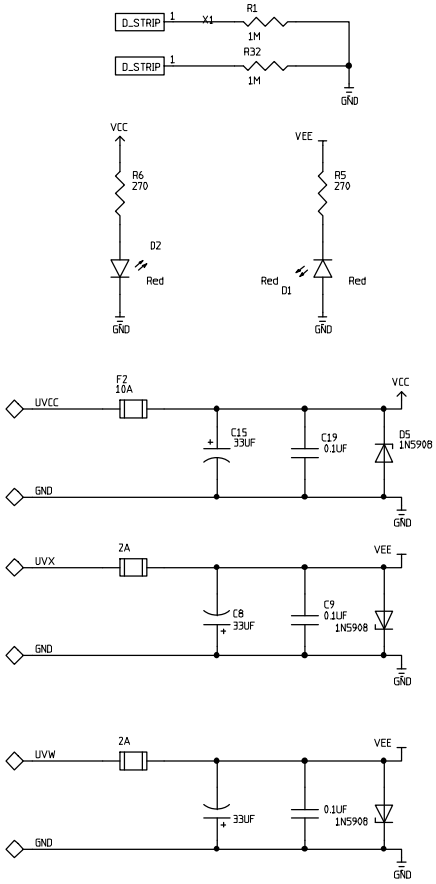

CONTRACT NO.		
APPROVALS	DATE	4:1 Fanout Module
DRAWN T. Shaw	5/6/99	Backplane Connectors - Power Only
CHECKED		SIZE C / FSCM NO. / DWG. NO. / REV
ISSUED		SCALE / SHEET