REVISIONS			
REV	DESCRIPTION	DATE	APPROVED
	X1		

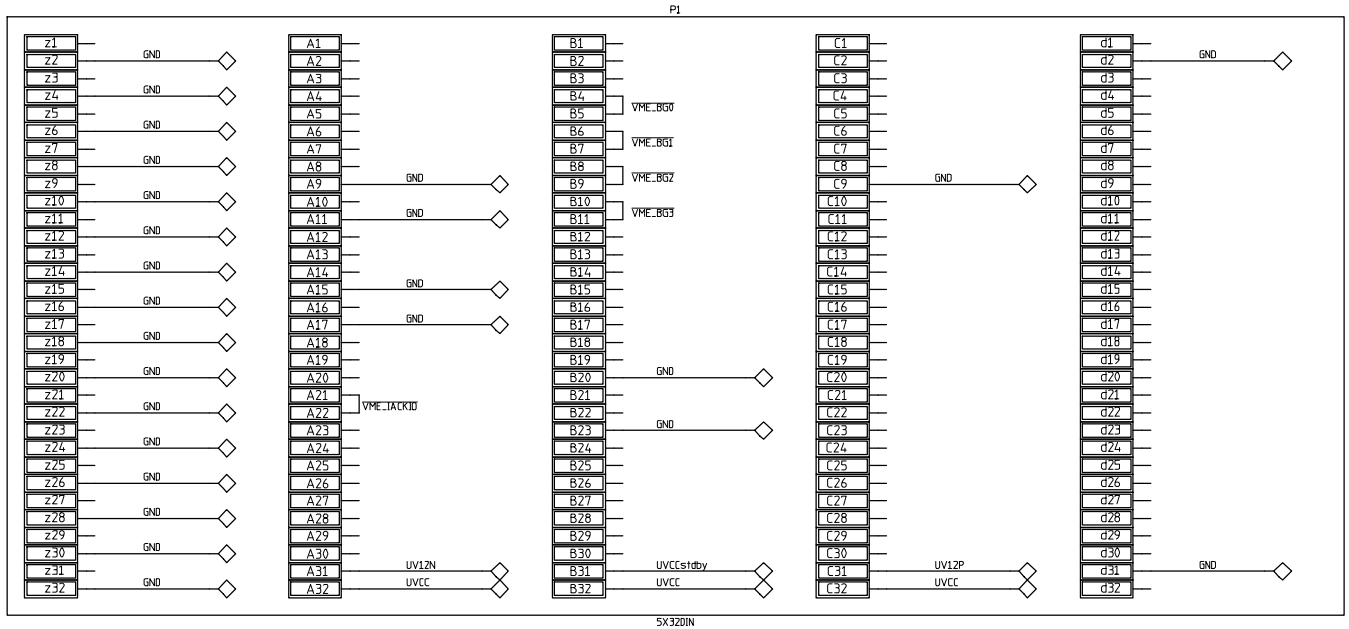

5X32DIN
HARTING-male

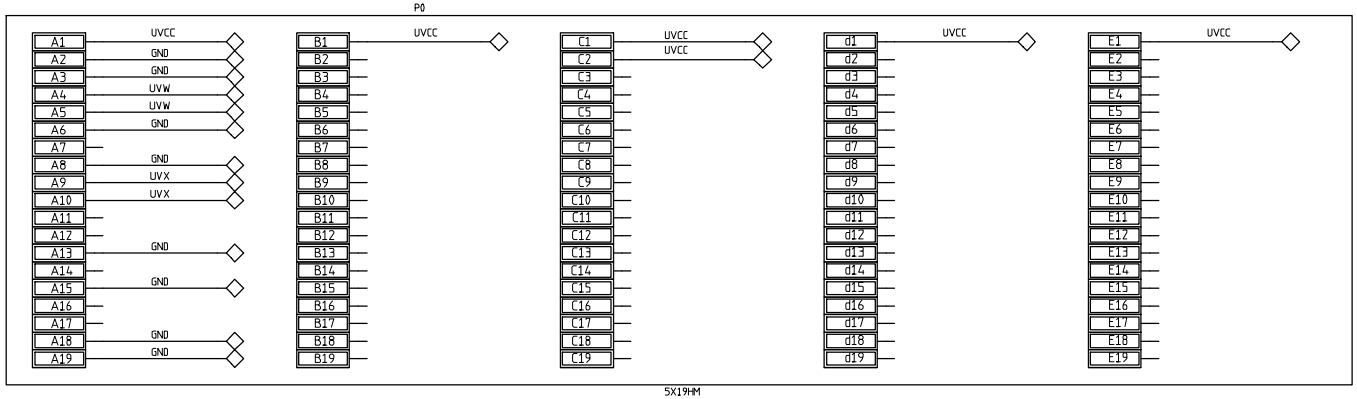

5X19HM
AMP 352009-1 PLUS SHIELDS .

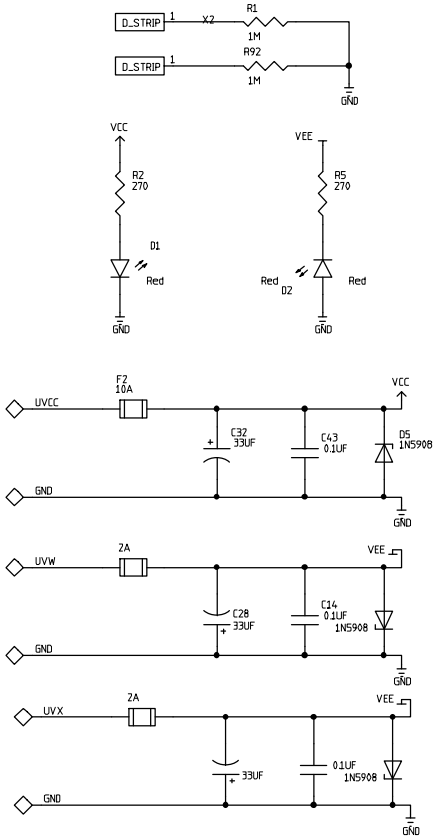

CONTRACT NO.		
APPROVALS	DATE	9:1 Fanout Module
DRAWN T. Shaw	5/6/99	Backplane Connectors - Power Only
CHECKED		SIZE C / FSCM NO. / DWG. NO. / REV
ISSUED		SCALE / SHEET