DWG NO	SIR	REV

REVISIONS

REV	DESCRIPTION	DATE	APPROVED

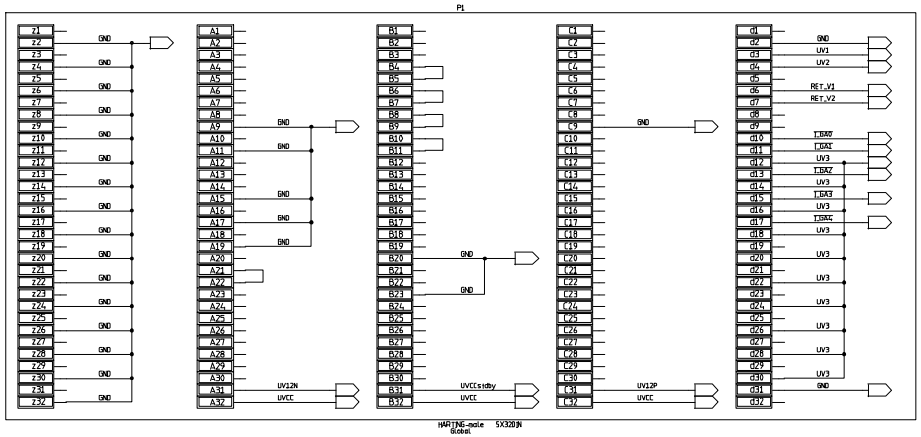

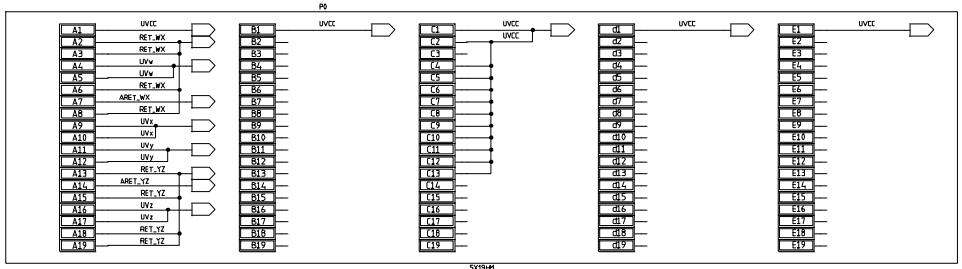

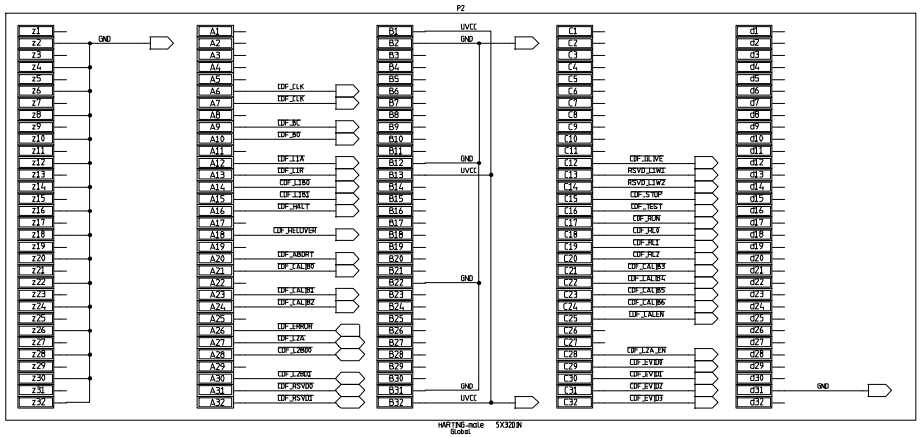

CDF UPGRADE ELECTRONICS	Fermi National Accelerator Lab CDF VITA LOAD BOARD VMEbus Connectors		
Theresa M. Shaw	SIZE D	DWG NO SHAW/WESSON-8-7-96	REV A
RD/EED/EES	SCALE	SHEET 1 of 5	