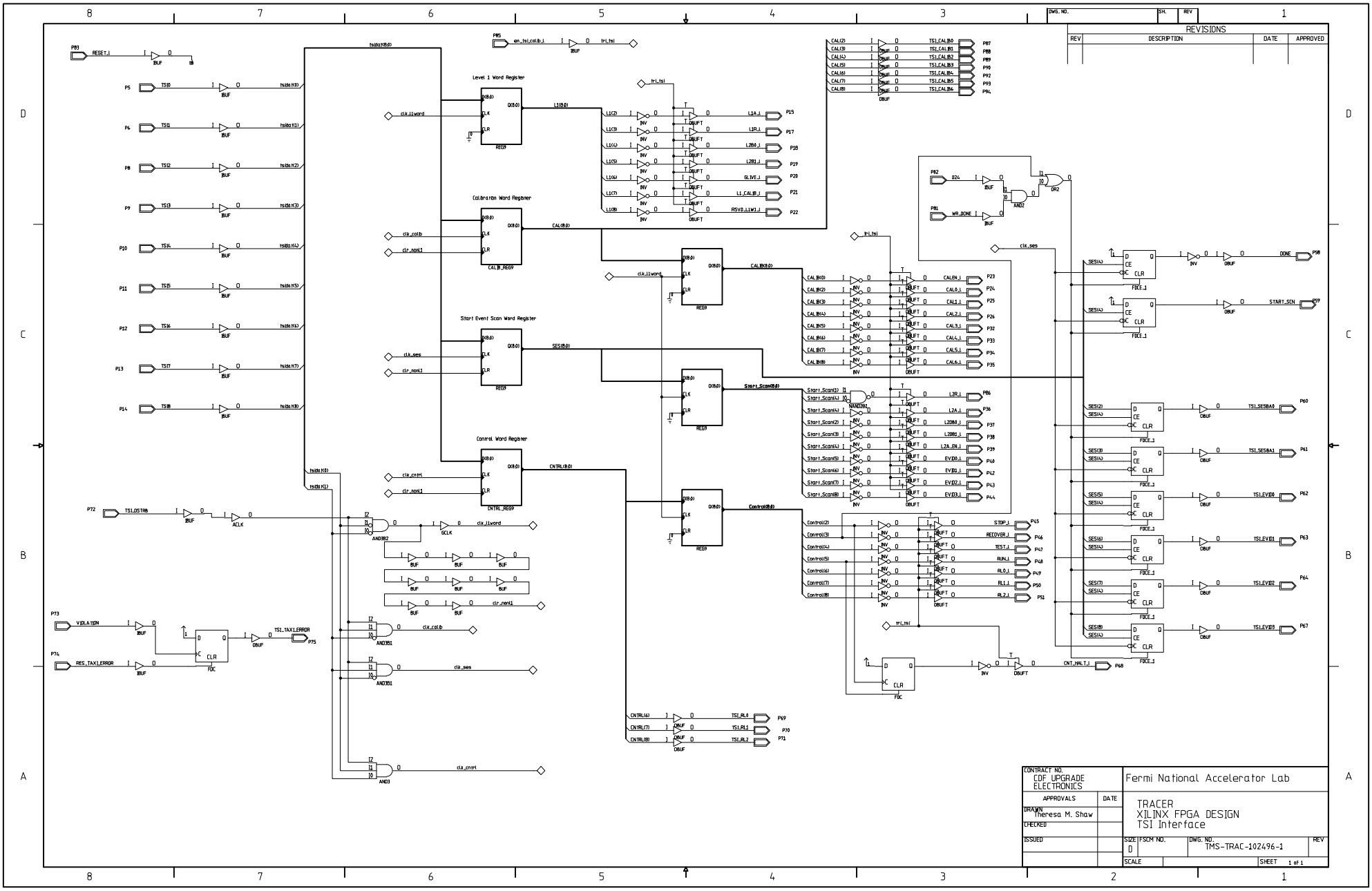
REVISIONS
REV
DESCRIPTION
DATE
APPROVED
Level 1 Word Register
Calibration Word Register
Start Event Scan Word Register
Control Word Register
CONTRACT NO.
CDF UPGRADE ELECTRONICS
Fermi National Accelerator Lab
APPROVALS
DATE
DRAWN Theresa M. Shaw
CHECKED
ISSUED
TRACER
XILINX FPGA DESIGN
TSI Interface
SIZE D
FSCM NO.
DWG. NO. TMS-TRAC-102496-1
REV
SCALE
SHEET 1 of 1