REVISIONS			
REV	DESCRIPTION	DATE	APPROVED

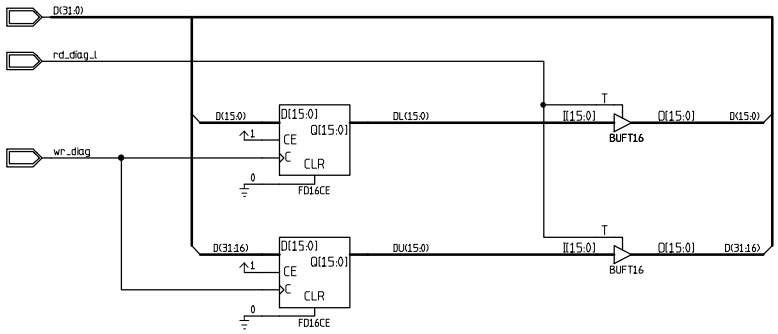

CONTRACT NO.		Fermi National Accelerator Lab		
APPROVALS	DATE	Xilinx FPGA TRACER VME Slave Diagnostic Register		
DRAWN				
CHECKED		SIZE C	FSCM NO.	DWG. NO. TMS-TRAC-012697-DIAG	REV
ISSUED		SCALE		SHEET

H=4ND; V=4LA