REVISIONS			
REV	DESCRIPTION	DATE	APPROVED

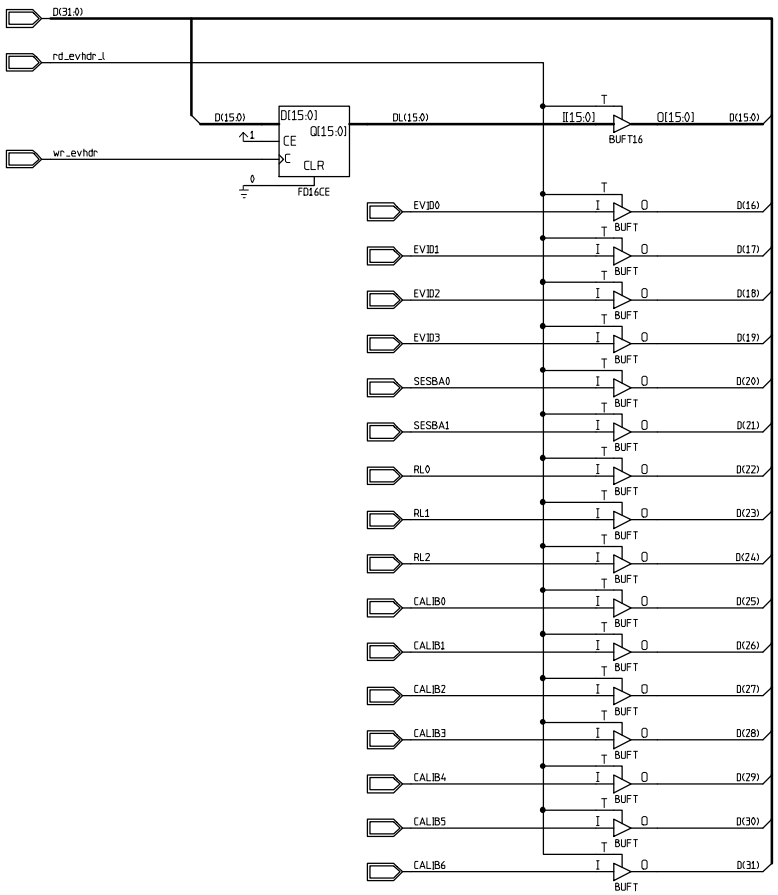

CONTRACT NO.		Fermi National Accelerator Lab
APPROVALS	DATE	Xilinx FPGA TRACER VME Slave Event Header Register
DRAWN		
CHECKED		SIZE C / FSCM NO. / DWG. NO. TMS-TRAC-012697-EVHDR / REV
ISSUED		SCALE / SHEET

DWG. NO. SH. REV

H=4ND; V=4LA