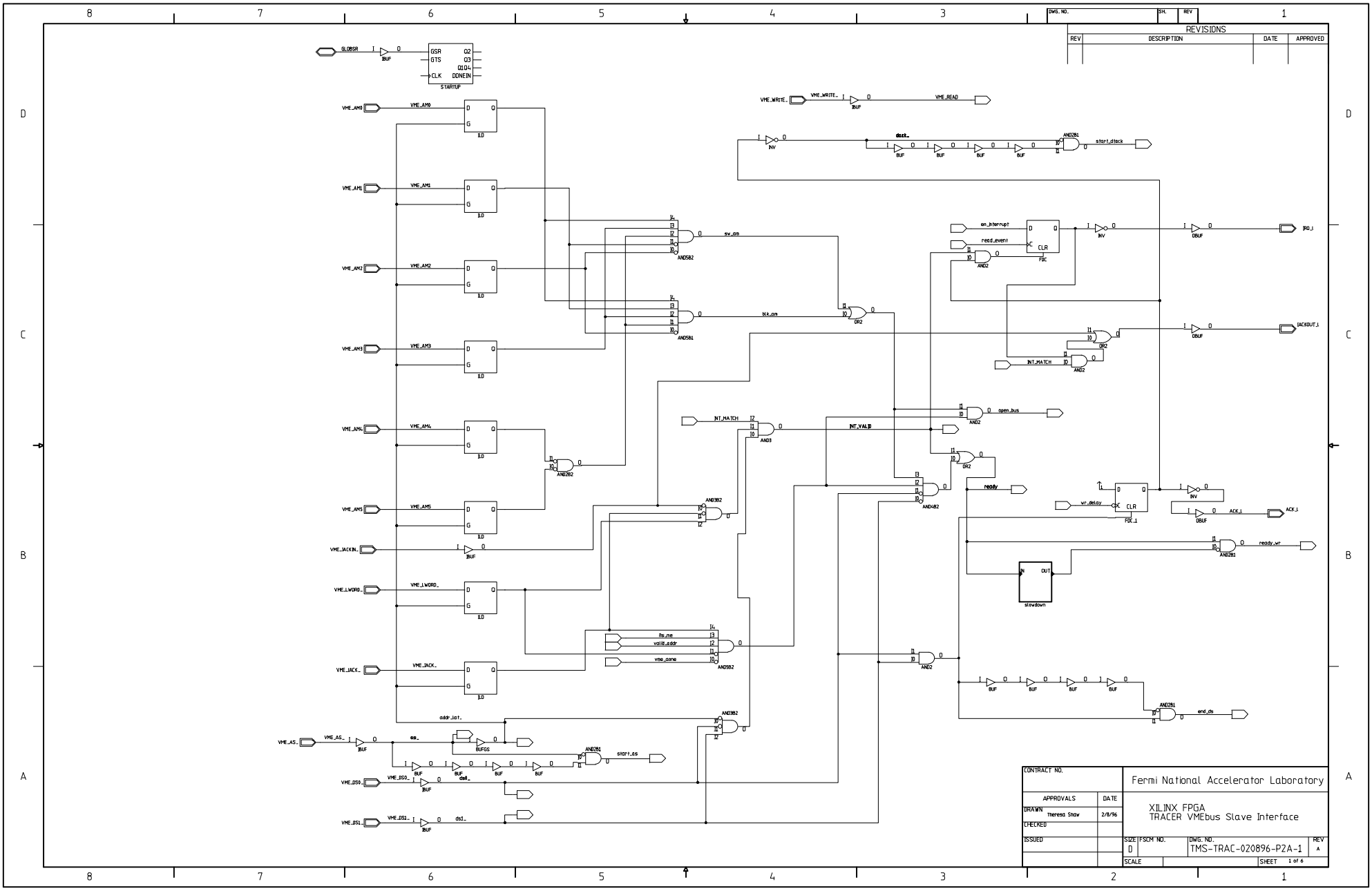

REVISIONS
REV
DESCRIPTION
DATE
APPROVED
DWG. NO.
SH.
REV
GLOBSR
STARTUP
VME_AM0
VME_AM1
VME_AM2
VME_AM3
VME_AM4
VME_AM5
VME_IACKIN_
VME_LWORD_
VME_IACK_
VME_AS_
VME_DS0_
VME_DS1_
VME_WRITE_
VME_READ
start_dtack
sw_am
blk_am
INT_MATCH
INT_VALID
open_bus
ready
wr_delay
ACK_L
ready_wr
slowdown
end_ds
addr_lat_
start_as
CONTRACT NO.
APPROVALS
DATE
DRAWN
Theresa Shaw
2/8/96
CHECKED
ISSUED
Fermi National Accelerator Laboratory
XILINX FPGA
TRACER VMEbus Slave Interface
SIZE
D
FSCM NO.
DWG. NO.
TMS-TRAC-020896-P2A-1
REV
A
SCALE
SHEET
1 of 6