DWG. NO.	SH.	REV

REVISIONS

REV	DESCRIPTION	DATE	APPROVED

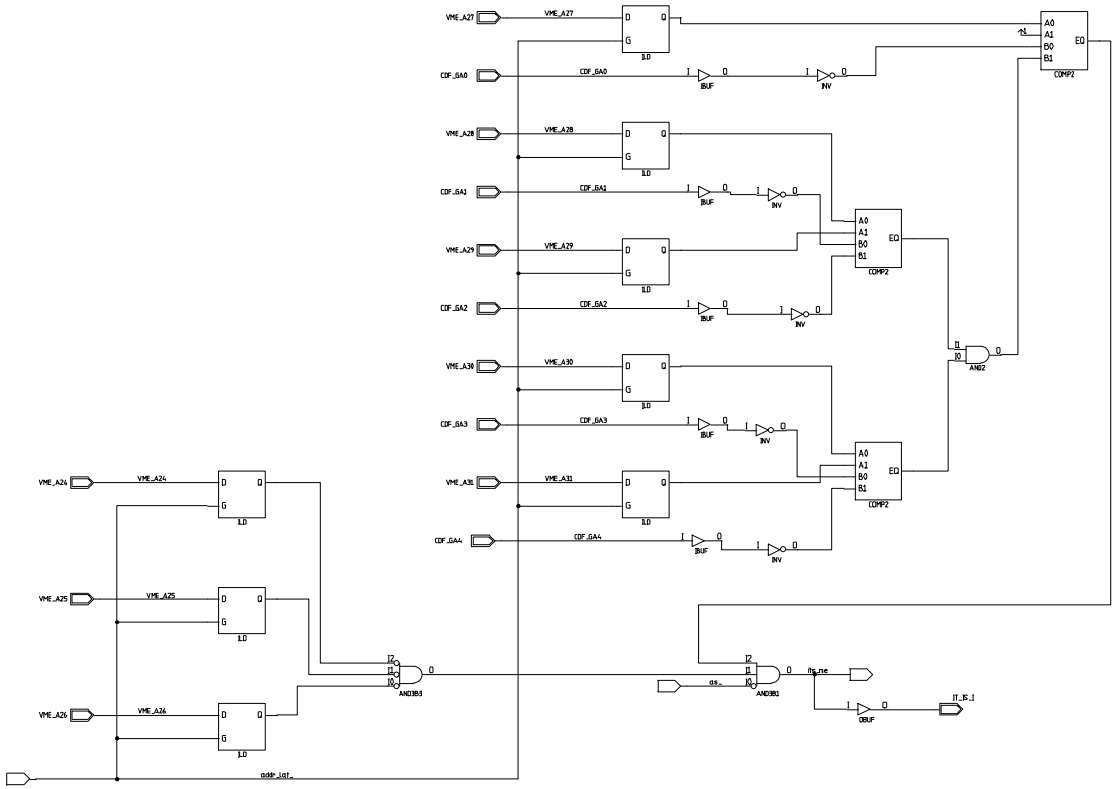

CONTRACT NO.		Fermi National Accelerator Laboratory
APPROVALS	DATE	XILINX FPGA TRACER VMEbus Slave Interface
DRAWN Theresa Shaw	2/8/96	
CHECKED		
ISSUED		SIZE D · FSCM NO. · DWG. NO. TMS-TRAC-020896-P2A-4 · REV A
		SCALE · SHEET 4 of 6