DWG. NO.	SH.	REV

REVISIONS

REV	DESCRIPTION	DATE	APPROVED

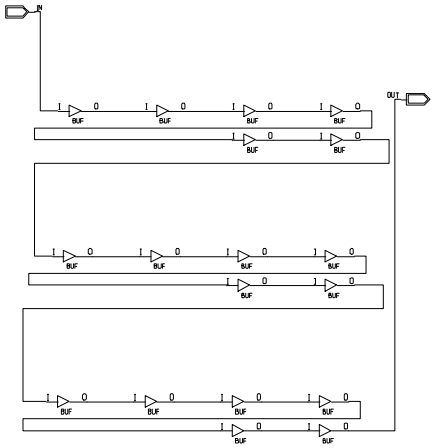

CONTRACT NO.	Fermi National Accelerator Laboratory
APPROVALS / DATE	XILINX FPGA Slowdown
DRAWN Theresa Shaw 2/8/96	
CHECKED	
ISSUED	SIZE D · FSCM NO. · DWG. NO. TMS-TRAC-020896-P2A-1A · REV A
	SCALE · SHEET 1 of 4