REVISIONS			
REV	DESCRIPTION	DATE	APPROVED

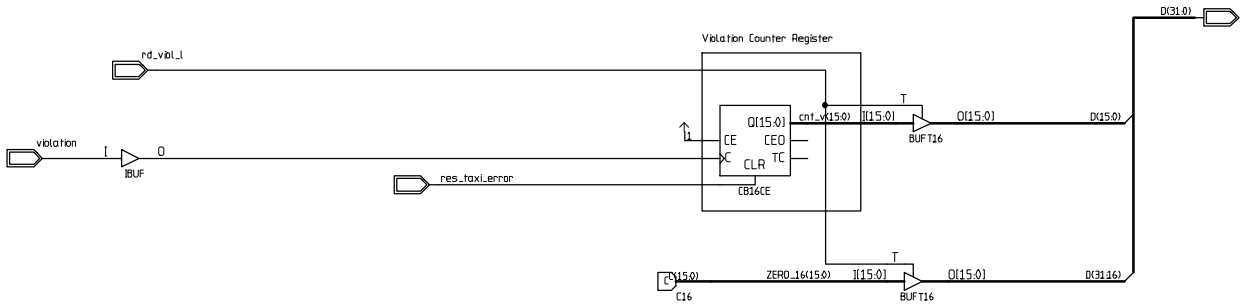

CONTRACT NO.		Fermi National Accelerator Lab			
APPROVALS	DATE	XiLinx FPGA TRACER VME Slave TSI TAXI Violation Counter Register			
DRAWN					
CHECKED					
ISSUED		SIZE C	FSCM NO.	DWG. NO. TMS-TRAC-012697-AREG	REV
		SCALE		SHEET	

H=4ND; V=4LA