THIS DRAWING IS UNPUBLISHED. RELEASED FOR PUBLICATION , 19 .
© COPYRIGHT 19 BY AMP INCORPORATED. ALL RIGHTS RESERVED.

LOC	DIST
DR	01

REVISIONS

P	LTR	DESCRIPTION	DATE	DWN	APVD
	A	EC 0D30-0052-99	22FEB99	PEM	

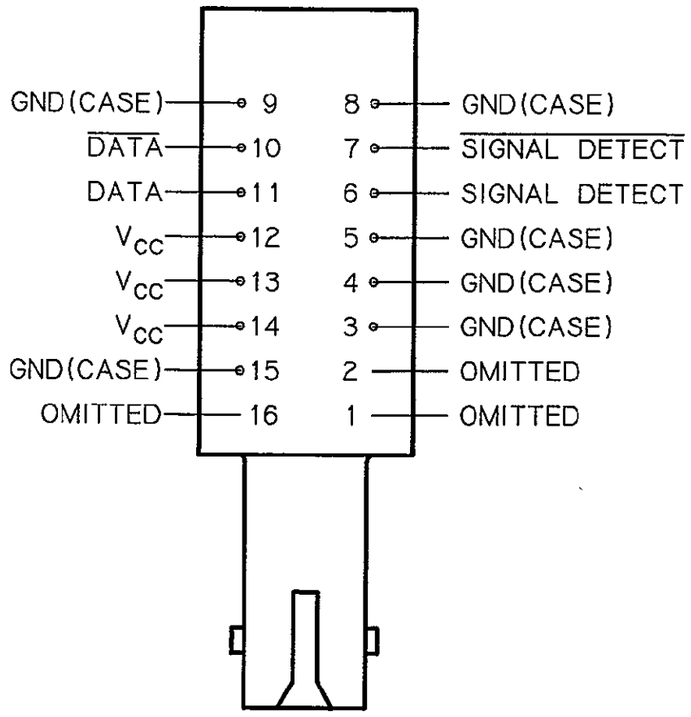

PINOUT WHEN VIEW FROM TOP

RAISED ECL V_{EE} = GND
V_{CC} = +5V ±5%

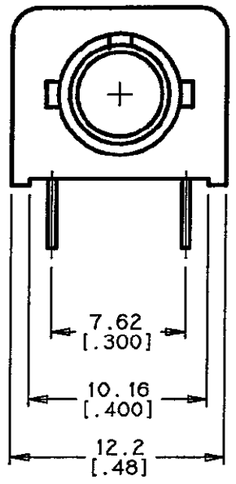

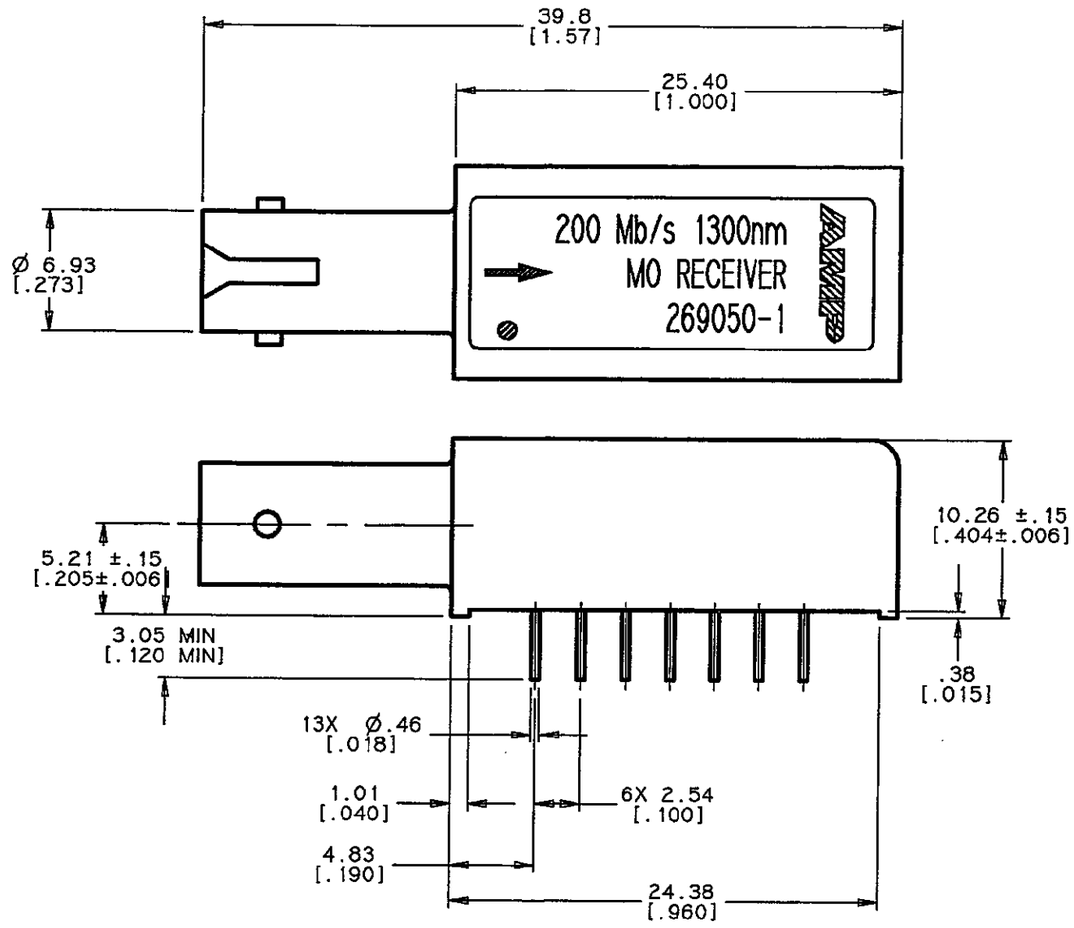

NOTES:

1. DIMENSIONS IN [ ] ARE IN INCHES.
2. PIN PLATING: 100 MICROINCHES MIN 93/7 SnPb OVER 50 MICROINCHES MIN NICKEL.
3. MEASURED USING $2^{15}-1$ PRBS.
4. 0ns EYE OPENING, V_{CC} =5V, 25°C, $2^{15}-1$ PRBS. 2dB IS BUDGETED TO OPEN EYE FROM 0 TO 2ns.
5. VOLTAGE LEVELS ARE COMPATIBLE WITH 100K, 10K, AND 10KH SERIES LOGIC LEVELS WHEN USED DIFFERENTIALLY.
6. UNIT PROVIDED WITH PROCESS CAP TO PROTECT OPTICAL PORTS DURING SOLDERING AND CLEANING PROCESSES.
7. DOES NOT INCLUDE ECL LOAD CURRENTS.
8. CASE MATERIAL: NICKEL PLATED ZINC

THIS DRAWING IS A CONTROLLED DOCUMENT FOR AMP INCORPORATED. IT IS SUBJECT TO CHANGE AND THE CONTROLLING ENGINEERING ORGANIZATION SHOULD BE CONTACTED FOR THE LATEST REVISION.

DIMENSIONS: mm [Inches]

TOLERANCES UNLESS OTHERWISE SPECIFIED: 1 PLC. DEC. ±0.25 [.010] 2 PLC. DEC. ±0.13 [.005] ANGLES ±0.5 DEG.

MATERIAL:

FINISH:

DWN. P. MALARCHER
CHK. L. JACOB
APVD 22Feb99
PRODUCT SPEC. 108-55003
APPLICATION SPEC. -
WEIGHT. -
CUSTOMER DRAWING

AMP Incorporated
Harrisburg, PA 17105-3608

NAME
RECEIVER MODULE
MOLDED OPTICS, 16 PIN
2.5mm BAYONET, 200 Mb/s

PD\3115DCA

SIZE A3 | CAGE CODE — | DRAWING NO. C-269050-1

SCALE: 3:1 | SHEET 1 OF 2 | REV. A

AMP 1470-19 REV 10/93

THIS DRAWING IS UNPUBLISHED. RELEASED FOR PUBLICATION . 19 .
© COPYRIGHT 19 BY AMP INCORPORATED. ALL RIGHTS RESERVED.

LOC	DIST
DR	01

REVISIONS

P	LTR	DESCRIPTION	DATE	DWN	APVD
	A	EC 0D30-0052-99	-	PEM	-

PERFORMANCE SPECIFICATIONS (T_A = 0-70°C, $V_{CC} - V_{EE}$ = 4.75-5.25V DC)

PARAMETER	SYMBOL	TEST CONDITIONS	MIN	TYP	MAX	UNITS
DATA RATE (NRZ)	B	-	10	-	200	Mb/s
OPTICAL INPUT (AVG) (4) SENSITIVITY	P_{IN}	0.275NA 62.5/125μm FIBER B=200Mb/s, BER≤1.0×10^{-10}	-32.0	-	-14.0	dBm
OPTICAL WAVELENGTH	λ_{IN}	-	1270	-	1380	nm
DUTY CYCLE	-	-	40	50	60	%
OUTPUT RISETIME	t_{TLH}	20-80%, 50Ω TO V_{CC}-2V	.5	-	2.5	ns
OUTPUT FALLTIME	t_{THL}	80-20%, 50Ω TO V_{CC}-2V	.5	-	2.5	ns
PULSE WIDTH DISTORTION	|PWD|	50Ω TO V_{CC}-2V	-	-	0.4	ns
DATA DEPENDENT JITTER	t_{DDJ}	(3)	-	-	0.8	ns
DATA (OUTPUT) (5)	V_{OH}	50Ω TO V_{CC}-2V	V_{CC}-1.025	-	V_{CC}-.88	V
	V_{OL}	50Ω TO V_{CC}-2V	V_{CC}-1.81	-	V_{CC}-1.62	V
SIGNAL DETECT (OUTPUT) (5)	V_A	$P_{IN} \geq P_A$, 50Ω TO V_{CC}-2V	V_{CC}-1.025	-	V_{CC}-.88	V
	V_D	$P_{IN} < P_D$, 50Ω TO V_{CC}-2V	V_{CC}-1.81	-	V_{CC}-1.62	V
SIGNAL DETECT POWER LEVELS (AVG)						
DEASSERT	P_D		-39.0	-	-32.5	dBm
ASSERT	P_A		-38	-	-31.0	dBm
HYSTERESIS			1.5	2.0	-	dB
SIGNAL DETECT DELAY TIME						
DEASSERT		-	-	-	100	μs
ASSERT		-	-	-	50	μs
POWER SUPPLY VOLTAGE	$V_{CC} - V_{EE}$	-	4.75	5.0	5.25	V
SUPPLY CURRENT (7)	I_{CC}	-	-	-	110	mA
OPERATING TEMPERATURE	T_A	-	0	-	70	°C

ABSOLUTE MAXIMUM RATINGS

STORAGE TEMPERATURE	-	-	-40	-	100	°C
LEAD SOLDERING LIMITS	-	-	-	-	240/10	°C/s
POWER SUPPLY VOLTAGE	$V_{CC} - V_{EE}$	-	-.2	-	7.00	V

THIS DRAWING IS A CONTROLLED DOCUMENT FOR AMP INCORPORATED. IT IS SUBJECT TO CHANGE AND THE CONTROLLING ENGINEERING ORGANIZATION SHOULD BE CONTACTED FOR THE LATEST REVISION.

DIMENSIONS: mm [inches]

TOLERANCES UNLESS OTHERWISE SPECIFIED:
1 PLC. DEC. ±0.25 [.010]
2 PLC. DEC. ±0.13 [.005]
ANGLES ±0.5 DEG.

MATERIAL:

FINISH:

DWN. P. MALARCHER
CHK. L. JACOB
APVD 22Feb97
PRODUCT SPEC. 108-55003
APPLICATION SPEC. -
WEIGHT. -
CUSTOMER DRAWING

AMP Incorporated
Harrisburg, PA 17105-3608

NAME
RECEIVER MODULE
MOLDED OPTICS, 16 PIN
2.5mm BAYONET, 200 Mb/s

PD\3116DCA

SIZE A3 | CAGE CODE — | DRAWING NO. C-269050-1

SCALE: 3:1 | SHEET 2 OF 2 | REV. A