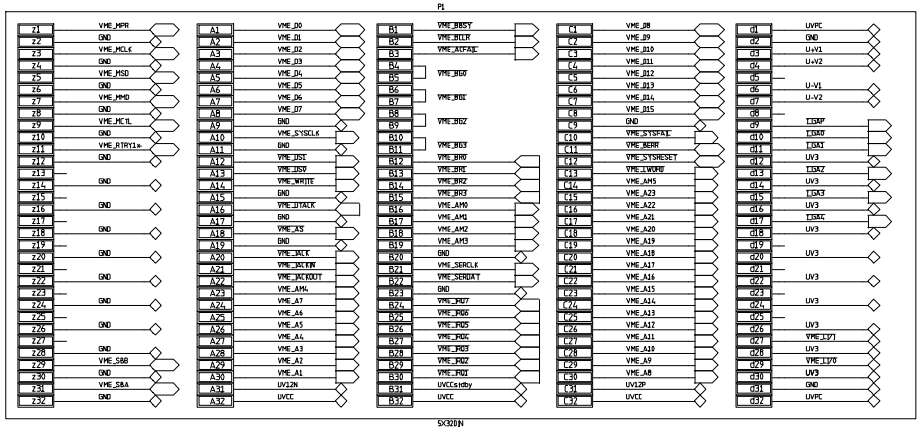

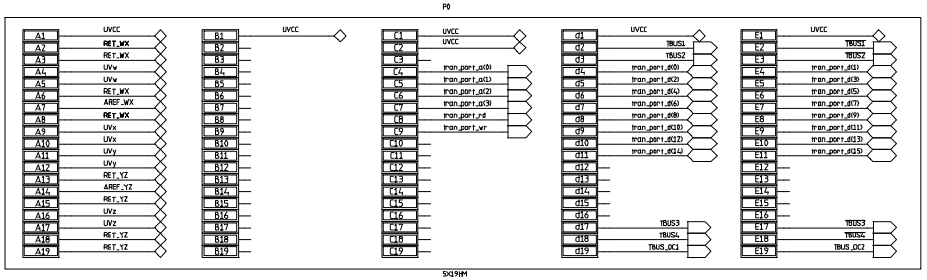

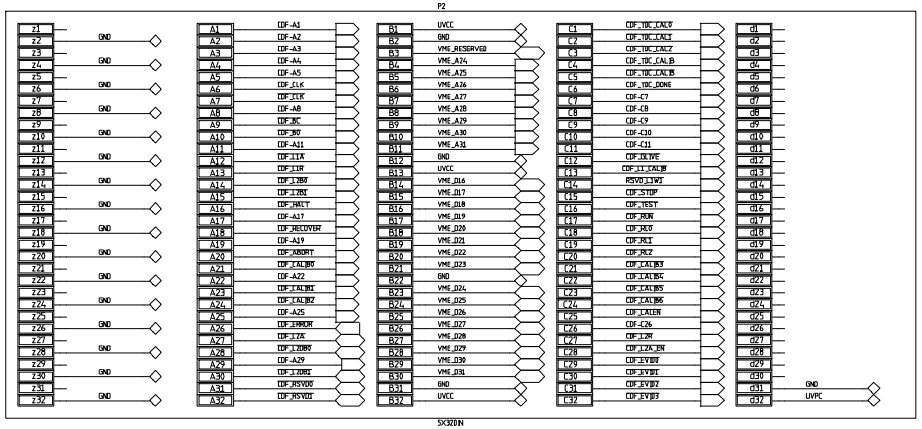

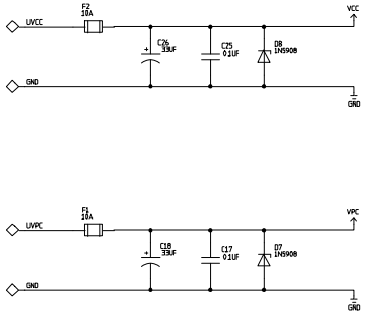

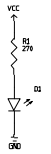

REV	DESCRIPTION	DATE	APPROVED

CDF UPGRADE ELECTRONICS	Fermi National Accelerator Lab		
	TRACER P1/P0/P2 VMEbus Connectors		
Theresa M. Shaw	SIZE D	DWG NO TMS-TRAC-071197-P1	REV B
RD/EED/EES	SCALE	SHEET 1 of 17	