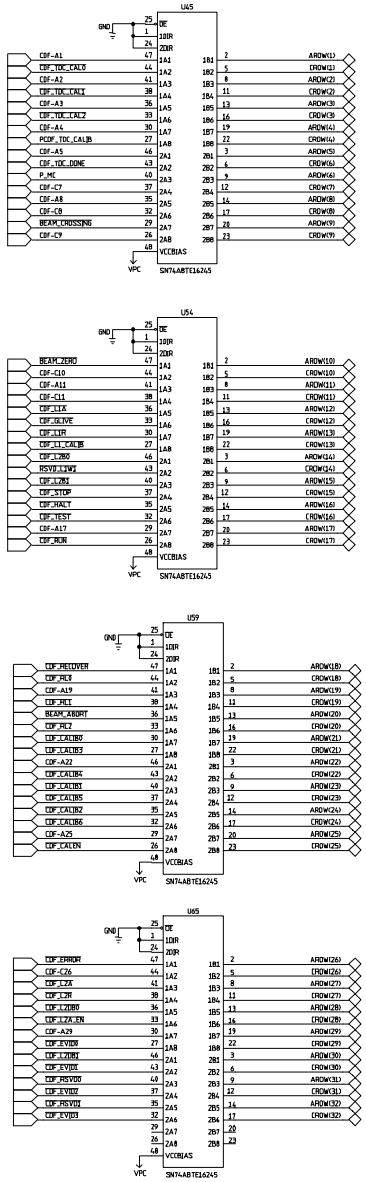

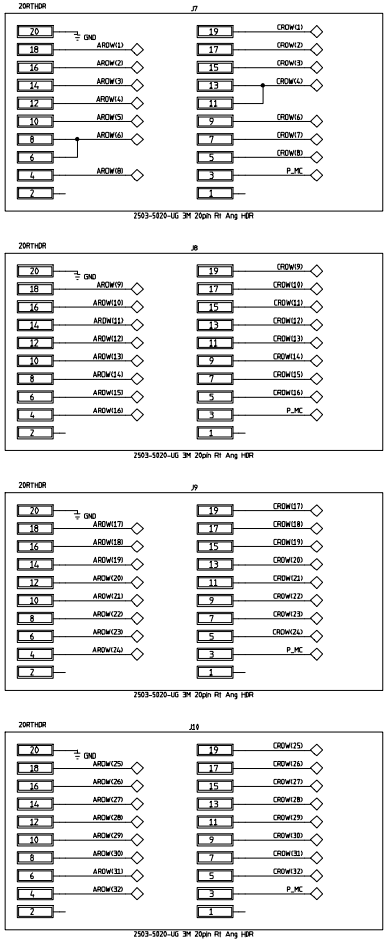

DWG NO	SH	REV

REVISIONS

REV	DESCRIPTION	DATE	APPROVED

CDF
UPGRADE
ELECTRONICS

Fermi National Accelerator Lab

TRACER
Front Panel Test Points
HP Logic Analyzer Ports

Theresa M. Shaw

RD/EED/EES

SIZE	FSMC NO	DWG NO	REV
D		TMS-TRAC-010898-P11	B

SCALE

SHEET 11 of 17