DWG NO	SH	REV

REVISIONS

REV	DESCRIPTION	DATE	APPROVED

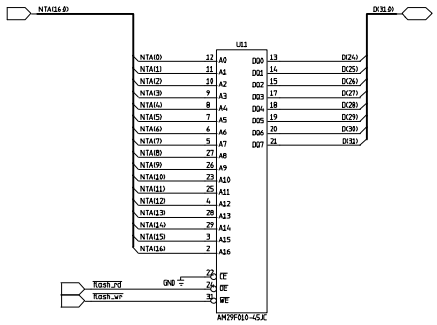

CDF UPGRADE ELECTRONICS	Fermi National Accelerator Lab TRACER Flash Ram Register			
Theresa M. Shav	SIZE D	FSCM NO	DWG NO TMS-TRAC-071197-P13	REV B
RD/EED/EES	SCALE		SHEET 13 of 17	