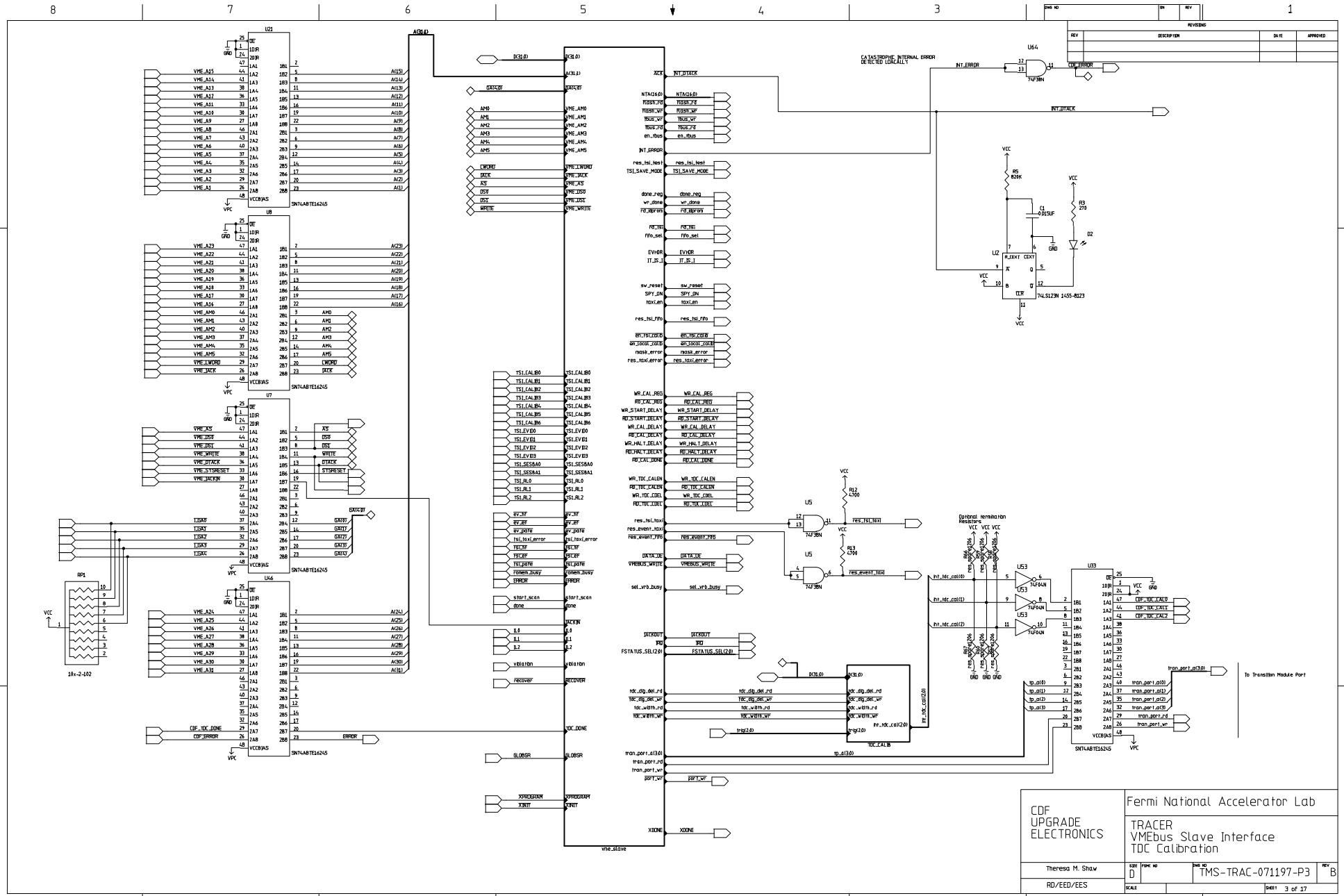

U21
U8
U7
U46
SN74ABTE16245
U64
74F38N
U2
74LS123N 1455-8123
U5
74F38N
U53
74F04N
U33
SN74ABTE16245
RP1
10x-2-102
vme_slave
TDC_CALIB
CATASTROPHIC INTERNAL ERROR DETECTED LOCALLY
Optional termination Resistors
To Transition Module Port
REVISIONS
REV
DESCRIPTION
DATE
APPROVED
CDF UPGRADE ELECTRONICS
Fermi National Accelerator Lab
TRACER
VMEbus Slave Interface
TDC Calibration
Theresa M. Shaw
RD/EED/EES
SIZE D
DWG NO TMS-TRAC-071197-P3
REV B
SCALE
SHEET 3 of 17