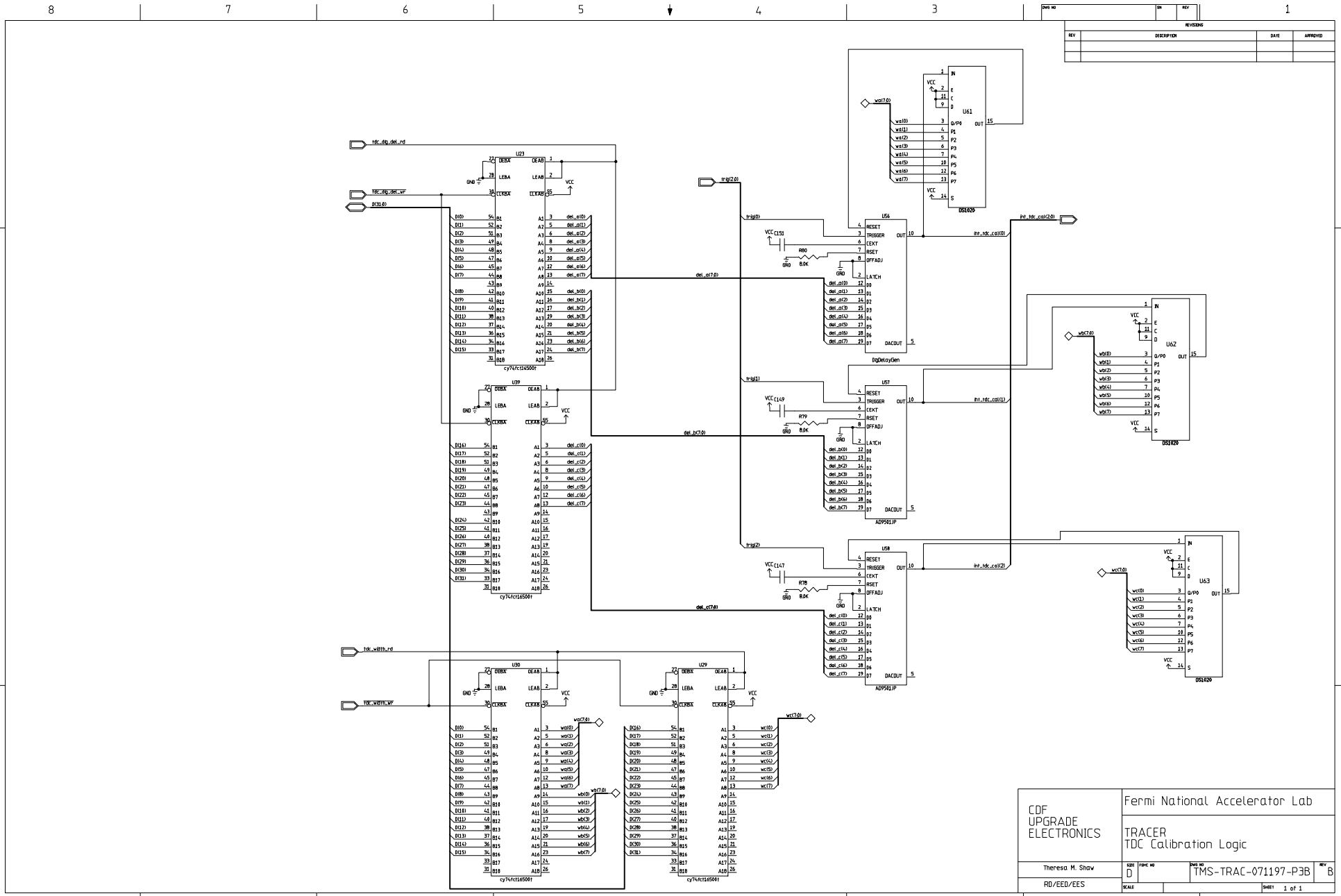
REVISIONS
REV
DESCRIPTION
DATE
APPROVED
tdc_dig_del_rd
tdc_dig_del_wr
D(31:0)
U23
U39
U30
U29
cy74fct16500t
trig(2:0)
trig(0)
trig(1)
trig(2)
U54
U57
U58
AD9501JP
DigDelayGen
del_a(7:0)
del_b(7:0)
del_c(7:0)
int_tdc_cal(2:0)
int_tdc_cal(0)
int_tdc_cal(1)
int_tdc_cal(2)
U61
U62
U63
DS1020
wa(7:0)
wb(7:0)
wc(7:0)
tdc_w8ith_rd
tdc_w8ith_wr
CDF
UPGRADE
ELECTRONICS
Fermi National Accelerator Lab
TRACER
TDC Calibration Logic
Theresa M. Shaw
RD/EED/EES
SIZE
D
DWG NO
TMS-TRAC-071197-P3B
REV
B
SCALE
SHEET 1 of 1