DWG NO	SH	REV

REVISIONS

REV	DESCRIPTION	DATE	APPROVED

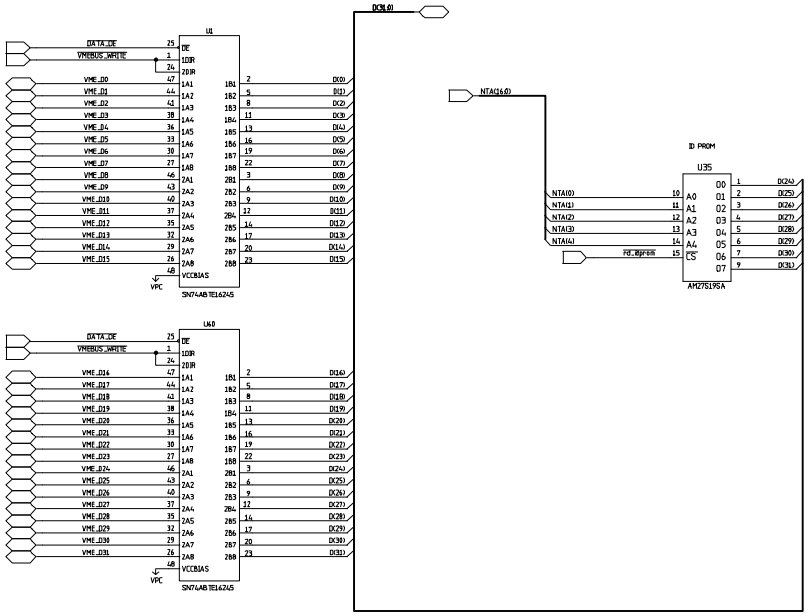

CDF UPGRADE ELECTRONICS	Fermi National Accelerator Lab		
	TRACER VMEbus Data Transceivers ID PROM		
Theresa M. Shaw	SIZE D	FSCM NO	DWG NO TMS-TRAC-071197-P4	REV B
RD/EED/EES	SCALE		SHEET 4 of 17