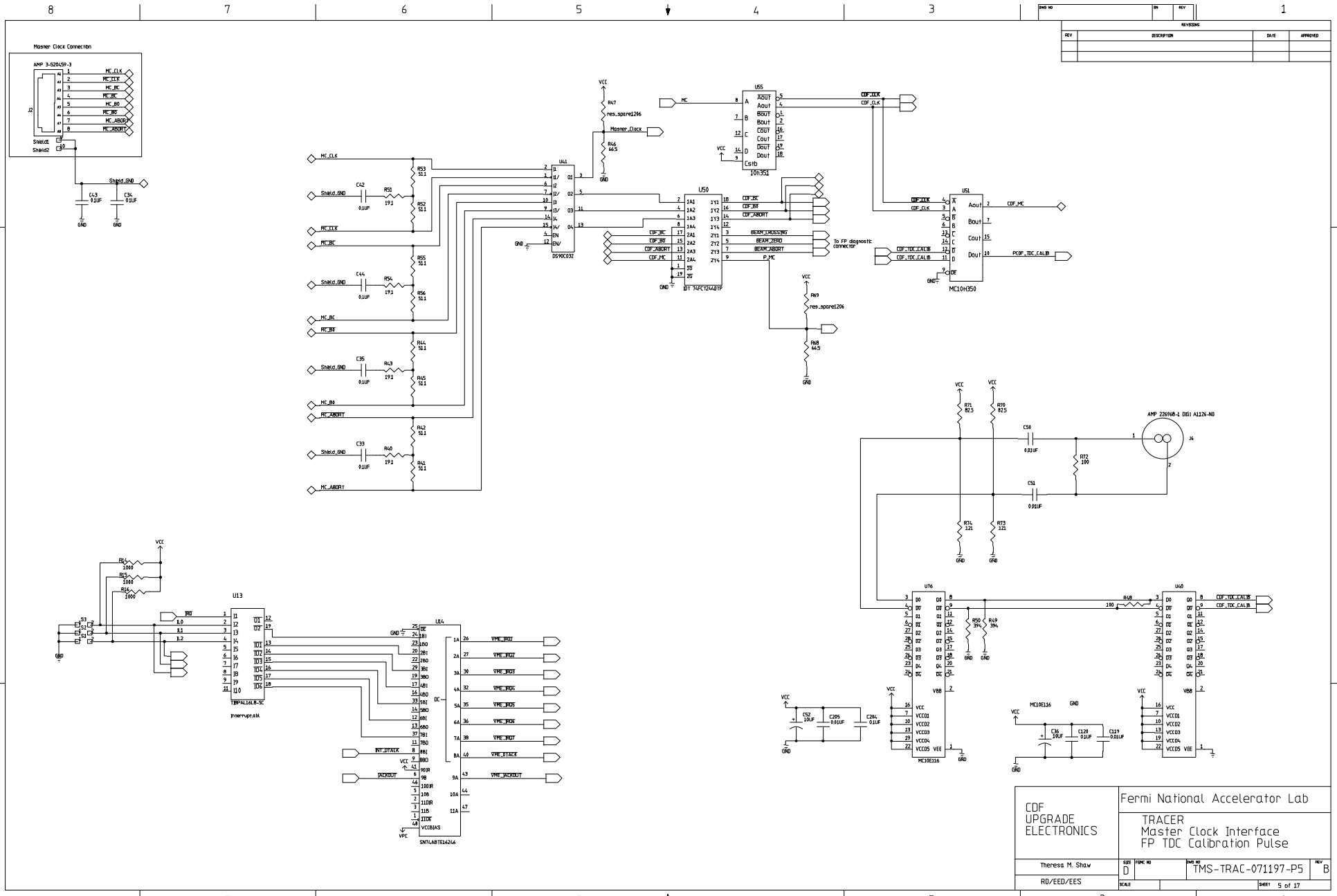
Master Clock Connection
AMP 3-520459-3
J2
MC_CLK
MC_BC
MC_B0
MC_ABORT
Shield1
Shield2
Shield_GND
C43 0.1UF
C34 0.1UF
GND
U41
DS90C032
R47 res_spare1206
Master_Clock
R46 66.5
U55
10h351
MC
CDF_CLK
U50
IDT 74FCT244DTP
CDF_BC
CDF_B0
CDF_ABORT
CDF_MC
BEAM_CROSSING
BEAM_ZERO
BEAM_ABORT
P_MC
To FP diagnostic connector
R69 res_spare1206
R68 66.5
U51
MC10H350
CDF_MC
PCDF_TDC_CALIB
CDF_TDC_CALIB
AMP 226968-1 DIGI A1126-ND
J6
C50 0.01UF
C51 0.01UF
R72 100
R71 82.5
R70 82.5
R74 121
R73 121
U76
MC10E116
U40
R48 100
R50 394
R49 394
C52 10UF
C205 0.01UF
C204 0.1UF
C36 10UF
C120 0.1UF
C119 0.01UF
U13
TBPAL16L8-5C
Interrupt.abl
R14 1000
R15 1000
R16 1000
U14
SN74ABTE16246
VME_IRQ1
VME_IRQ2
VME_IRQ3
VME_IRQ4
VME_IRQ5
VME_IRQ6
VME_IRQ7
VME_DTACK
VME_ACKOUT
INT_DTACK
ACKOUT
VCC
VPC
CDF
UPGRADE
ELECTRONICS
Fermi National Accelerator Lab
TRACER
Master Clock Interface
FP TDC Calibration Pulse
Theresa M. Shaw
RD/EED/EES
SIZE D
DWG NO TMS-TRAC-071197-P5
REV B
SCALE
SHEET 5 of 17