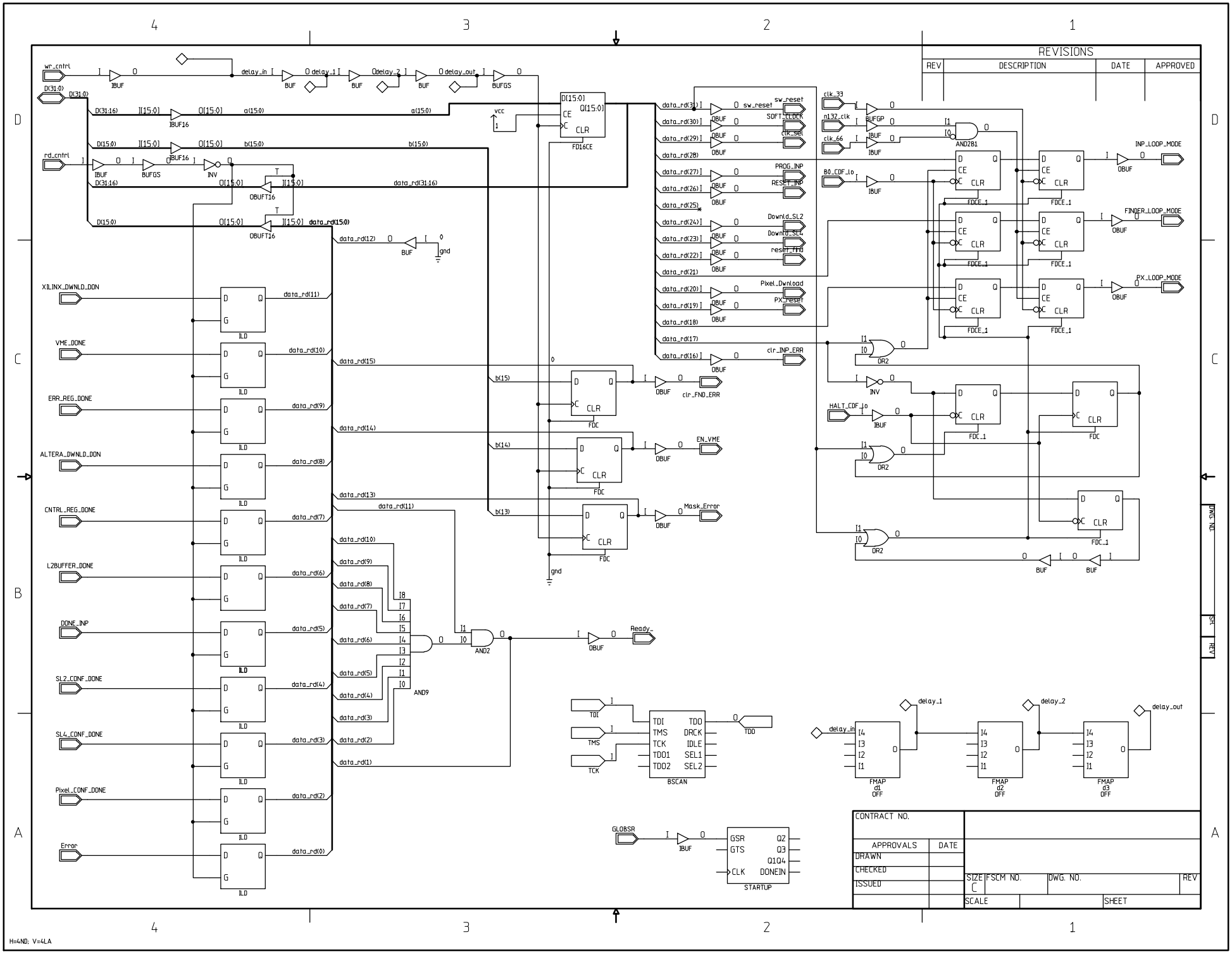
REVISIONS
REV
DESCRIPTION
DATE
APPROVED
wr_cntrl
rd_cntrl
D(31:0)
IBUF
BUF
BUFGS
IBUF16
INV
OBUFT16
delay_in
delay_1
delay_2
delay_out
FD16CE
vcc
sw_reset
SOFT_CLOCK
clk_sel
PROG_INP
RESET_INP
Downld_SL2
Downld_SL4
reset_find
Pixel_Dwnload
PX_reset
clr_INP_ERR
clk_33
n132_clk
clk_66
BUFGP
AND2B1
B0_CDF_lo
INP_LOOP_MODE
FINDER_LOOP_MODE
PX_LOOP_MODE
FDCE_1
OR2
HALT_CDF_lo
FDC
FDC_1
clr_FND_ERR
EN_VME
Mask_Error
XILINX_DWNLD_DON
VME_DONE
ERR_REG_DONE
ALTERA_DWNLD_DON
CNTRL_REG_DONE
L2BUFFER_DONE
DONE_INP
SL2_CONF_DONE
SL4_CONF_DONE
Pixel_CONF_DONE
Error
ILD
AND9
AND2
Ready_
TDI
TMS
TCK
TDO
BSCAN
FMAP d1 OFF
FMAP d2 OFF
FMAP d3 OFF
GLOBSR
GSR
GTS
CLK
Q2
Q3
Q1Q4
DONEIN
STARTUP
CONTRACT NO.
APPROVALS
DATE
DRAWN
CHECKED
ISSUED
SIZE
C
FSCM NO.
DWG. NO.
REV
SCALE
SHEET
DWG. NO.
SH.
REV
H=4ND; V=4LA