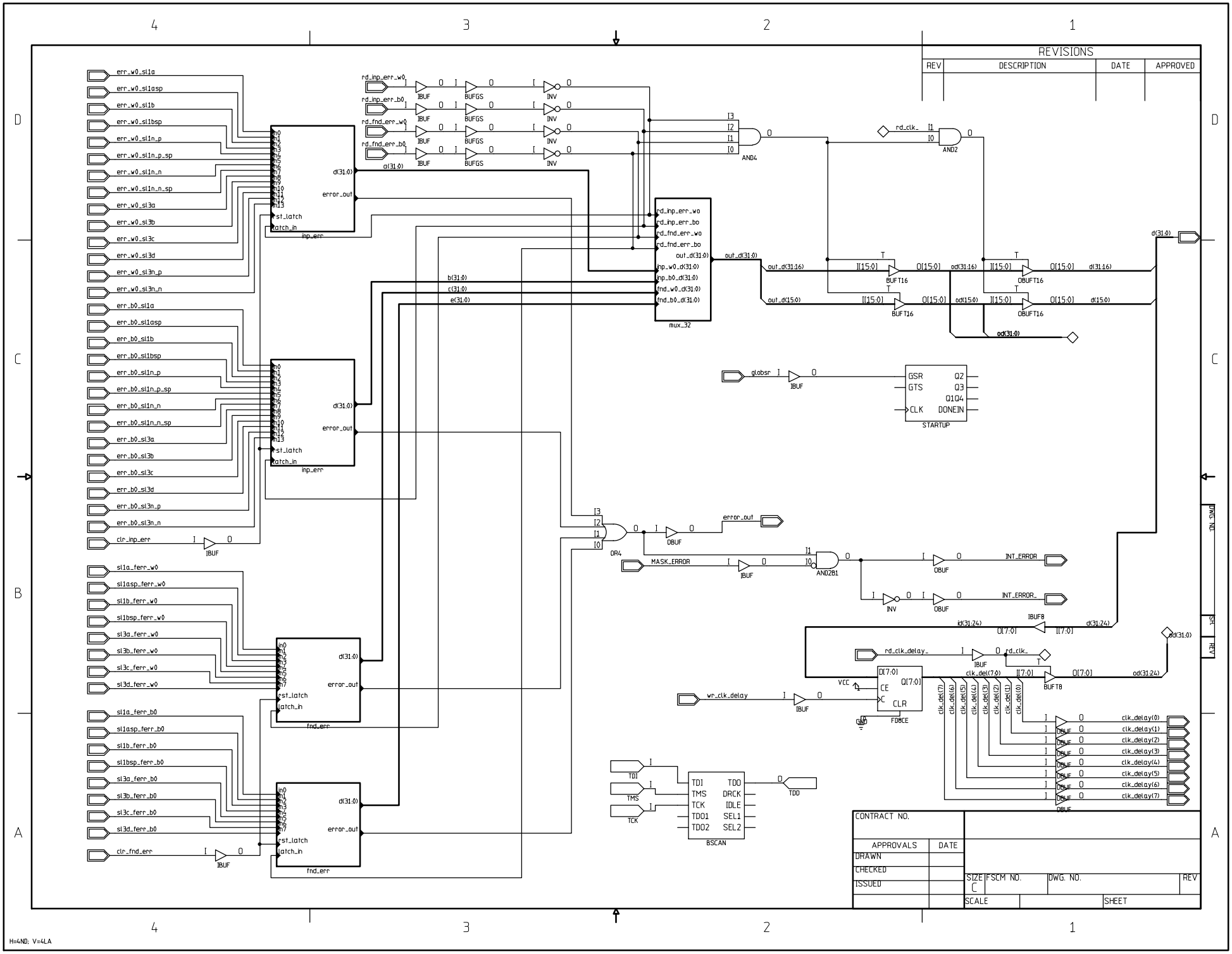
REVISIONS
REV
DESCRIPTION
DATE
APPROVED
err_w0_sl1a
err_w0_sl1asp
err_w0_sl1b
err_w0_sl1bsp
err_w0_sl1n_p
err_w0_sl1n_p_sp
err_w0_sl1n_n
err_w0_sl1n_n_sp
err_w0_sl3a
err_w0_sl3b
err_w0_sl3c
err_w0_sl3d
err_w0_sl3n_p
err_w0_sl3n_n
err_b0_sl1a
err_b0_sl1asp
err_b0_sl1b
err_b0_sl1bsp
err_b0_sl1n_p
err_b0_sl1n_p_sp
err_b0_sl1n_n
err_b0_sl1n_n_sp
err_b0_sl3a
err_b0_sl3b
err_b0_sl3c
err_b0_sl3d
err_b0_sl3n_p
err_b0_sl3n_n
clr_inp_err
sl1a_ferr_w0
sl1asp_ferr_w0
sl1b_ferr_w0
sl1bsp_ferr_w0
sl3a_ferr_w0
sl3b_ferr_w0
sl3c_ferr_w0
sl3d_ferr_w0
sl1a_ferr_b0
sl1asp_ferr_b0
sl1b_ferr_b0
sl1bsp_ferr_b0
sl3a_ferr_b0
sl3b_ferr_b0
sl3c_ferr_b0
sl3d_ferr_b0
clr_fnd_err
IBUF
inp_err
fnd_err
d(31:0)
error_out
rst_latch
latch_in
rd_inp_err_w0
rd_inp_err_b0
rd_fnd_err_w0
rd_fnd_err_b0
a(31:0)
BUFGS
INV
AND4
AND2
rd_clk_
mux_32
rd_inp_err_wo
rd_inp_err_bo
rd_fnd_err_wo
rd_fnd_err_bo
out_d(31:0)
inp_w0_d(31:0)
inp_b0_d(31:0)
fnd_w0_d(31:0)
fnd_b0_d(31:0)
b(31:0)
c(31:0)
e(31:0)
out_d(31:16)
out_d(15:0)
BUFT16
OBUFT16
od(31:16)
od(15:0)
od(31:0)
globsr
STARTUP
GSR
GTS
CLK
Q2
Q3
Q1Q4
DONEIN
OR4
OBUF
MASK_ERROR
AND2B1
INT_ERROR
INT_ERROR_
id(31:24)
IBUF8
d(31:24)
rd_clk_delay_
wr_clk_delay
FD8CE
VCC
GND
BUFTB
clk_del(7:0)
clk_delay(0)
clk_delay(1)
clk_delay(2)
clk_delay(3)
clk_delay(4)
clk_delay(5)
clk_delay(6)
clk_delay(7)
TDI
TMS
TCK
TDO
BSCAN
DRCK
IDLE
SEL1
SEL2
TDO1
TDO2
CONTRACT NO.
APPROVALS
DATE
DRAWN
CHECKED
ISSUED
SIZE
C
FSCM NO.
DWG. NO.
REV
SCALE
SHEET
DWG NO.
SHT
REV
H=4ND; V=4LA