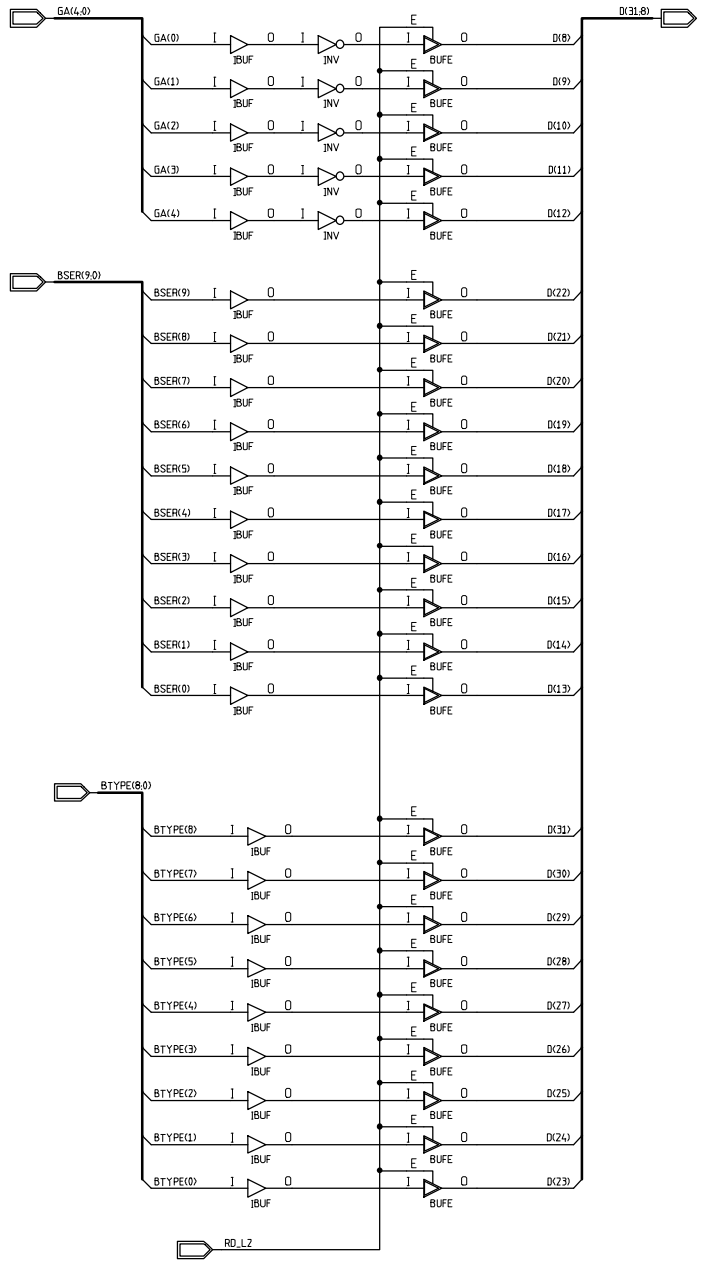

REVISIONS			
REV	DESCRIPTION	DATE	APPROVED

CONTRACT NO.		Fermi National Accelerator Laboratory
APPROVALS	DATE	ADMEM L2Header - Static Info Xilinx Design XC4000
DRAWN Theresa Shaw		
CHECKED		SIZE C · FSCM NO. · DWG. NO. TMS-PIPELINE-091396-P2 · REV
ISSUED		
RD/EED/EES		SCALE · SHEET

DWG NO. · SH. · REV