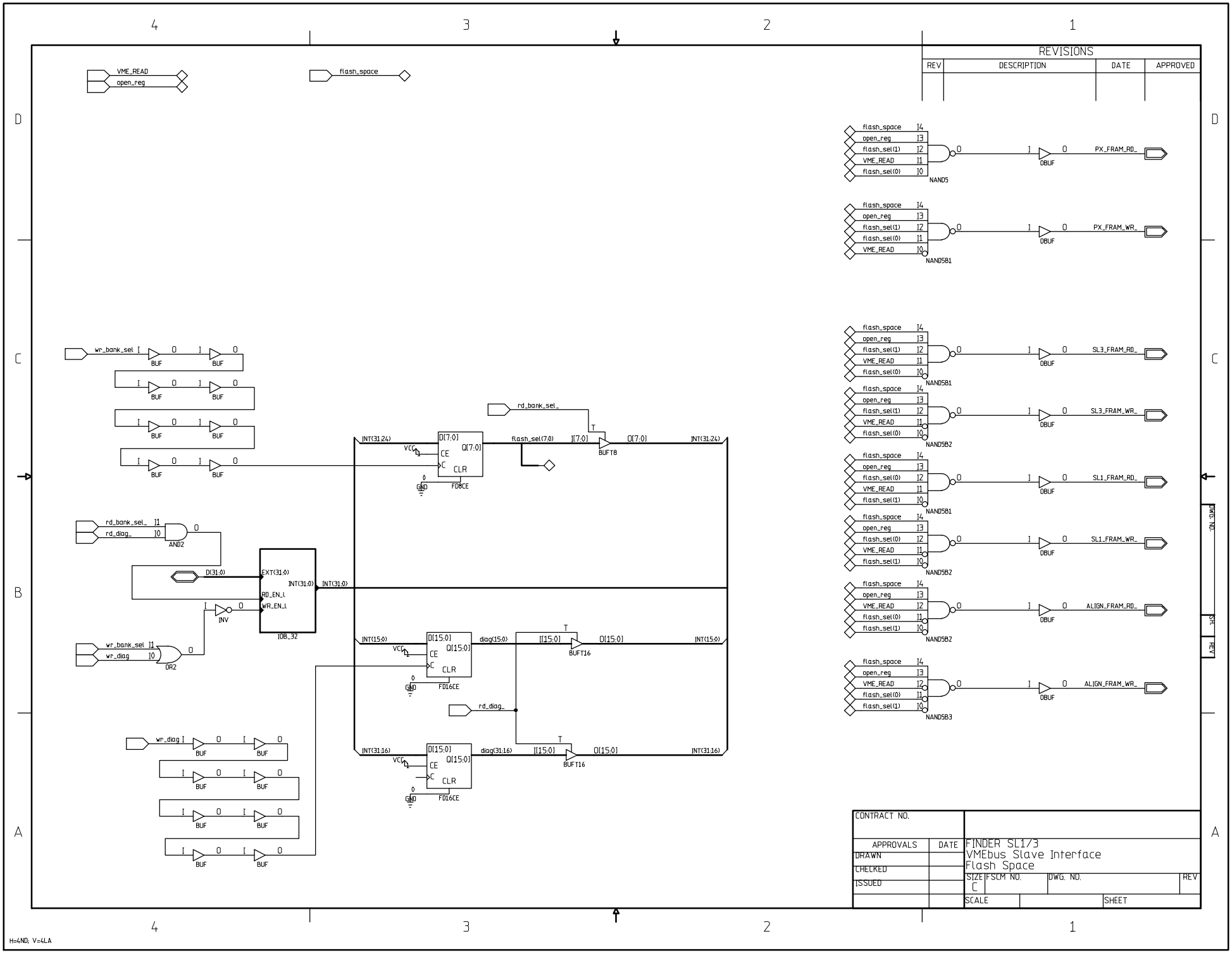
VME_READ
open_reg
flash_space
wr_bank_sel
BUF
rd_bank_sel_
rd_diag_
AND2
D(31:0)
EXT(31:0)
INT(31:0)
RD_EN_L
WR_EN_L
INV
IOB_32
wr_bank_sel
wr_diag
OR2
wr_diag
INT(31:24)
VCC
D[7:0]
Q[7:0]
CE
C
CLR
GND
FD8CE
flash_sel(7:0)
I[7:0]
O[7:0]
BUFT8
INT(15:0)
D[15:0]
Q[15:0]
FD16CE
diag(15:0)
I[15:0]
O[15:0]
BUFT16
INT(31:16)
diag(31:16)
flash_space
open_reg
flash_sel(1)
VME_READ
flash_sel(0)
NAND5
OBUF
PX_FRAM_RD_
NAND5B1
PX_FRAM_WR_
SL3_FRAM_RD_
NAND5B2
SL3_FRAM_WR_
SL1_FRAM_RD_
SL1_FRAM_WR_
ALIGN_FRAM_RD_
NAND5B3
ALIGN_FRAM_WR_
REVISIONS
REV
DESCRIPTION
DATE
APPROVED
CONTRACT NO.
APPROVALS
DRAWN
CHECKED
ISSUED
FINDER SL1/3
VMEbus Slave Interface
Flash Space
SIZE
C
FSCM NO.
DWG. NO.
REV
SCALE
SHEET
DWG NO.
SHT
REV
H=4ND; V=4LA