DWG NO	SH	REV

REVISIONS

REV	DESCRIPTION	DATE	APPROVED

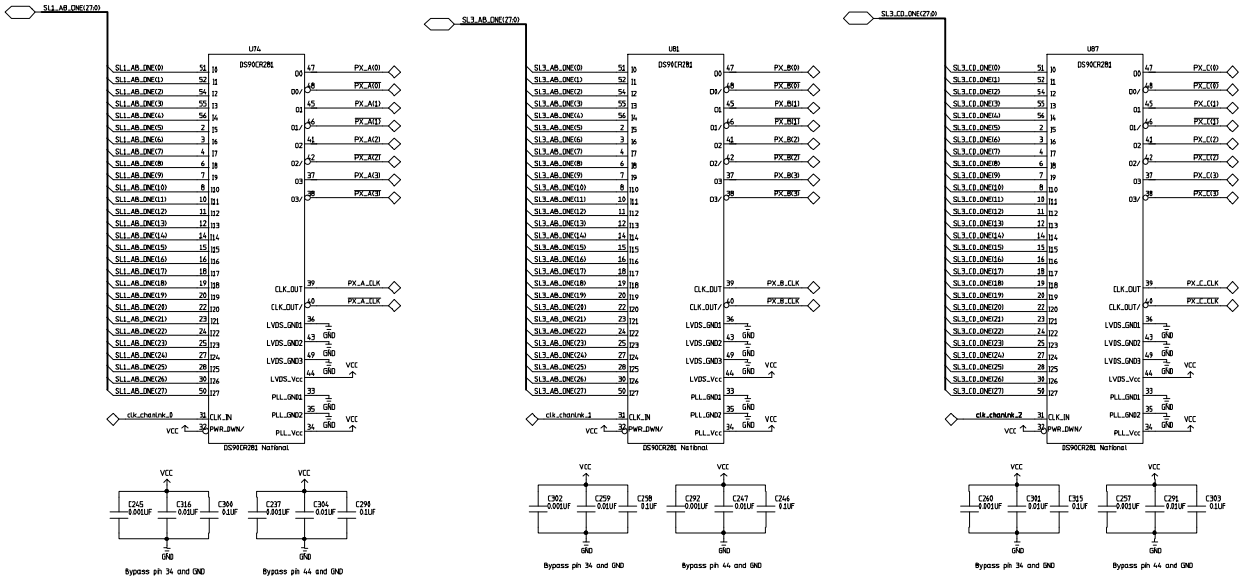

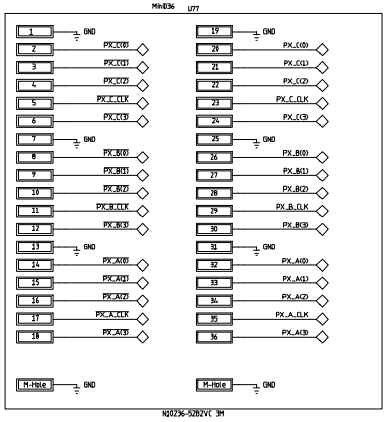

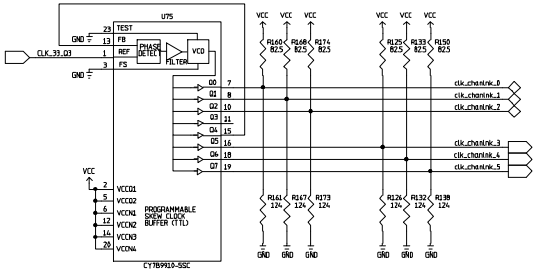

CDF UPGRADE ELECTRONICS	Fermi National Accelerator Lab		
	XFT Finder_13_V4 Super Layers 1 3 Pixel Drivers		
Theresa M. Shaw	SIZE D	FSHC NO	DWG NO TMS-XFTFND13-021999-P11	REV A
PPD/ET&T/CDF_Upgrade	SCALE		SHEET 11 of 18