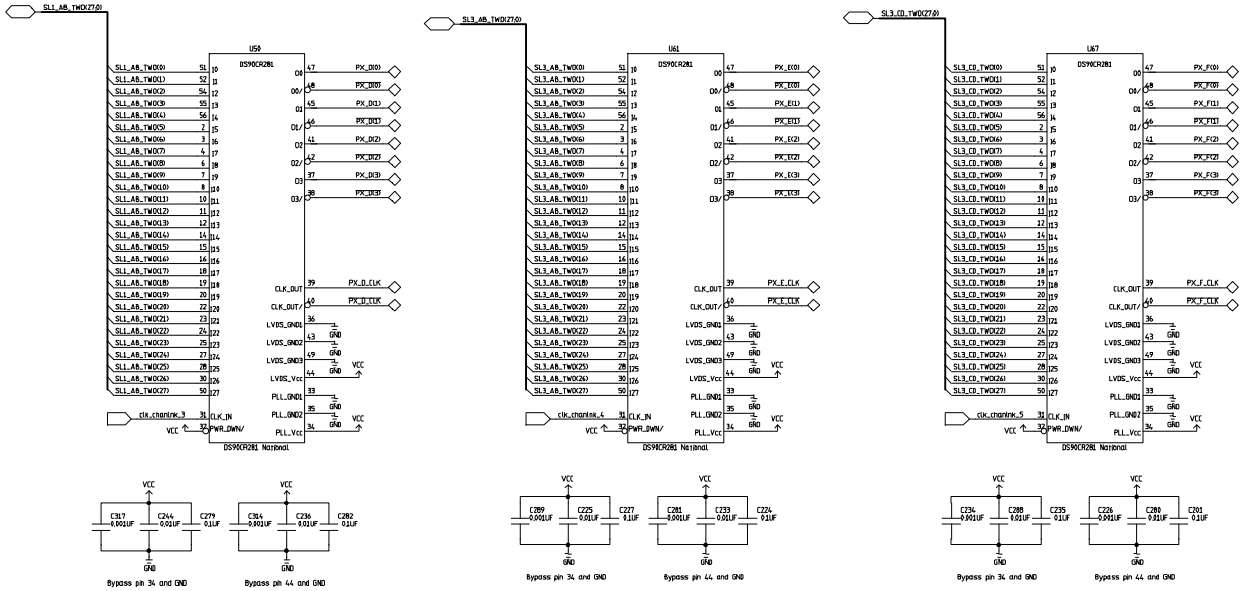

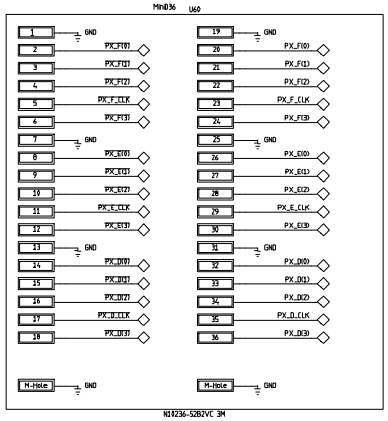

DWG NO	SH	REV

REVISIONS

REV	DESCRIPTION	DATE	APPROVED

CDF UPGRADE ELECTRONICS

Fermi National Accelerator Lab

XFT Finder_13_V4
Super Layers 1 3
Channel Linkl Drivers

Theresa M. Shaw

PPD/ET&T/CDF_Upgrade

SIZE D | FSHC NO | DWG NO TMS-XFTFND13-021999-P12 | REV A

SCALE | SHEET 12 of 18