DWG NO	SH	REV

REVISIONS

REV	DESCRIPTION	DATE	APPROVED

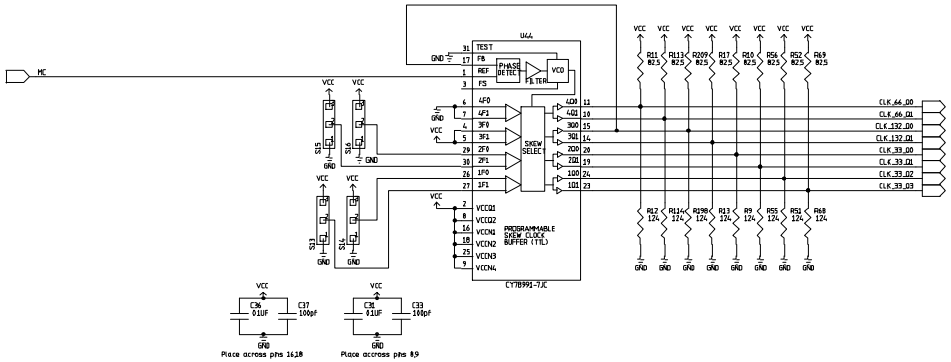

CDF UPGRADE ELECTRONICS	Fermi National Accelerator Lab		
	XFT Finder_13_V4 Super Layers 1 3 Clocking		
Theresa M. Shaw	SIZE D	FSCM NO	DWG NO TMS-XFTFND13-021999-P13	REV A
PPD/ET&T/CDF_Upgrade	SCALE		SHEET 13 of 18