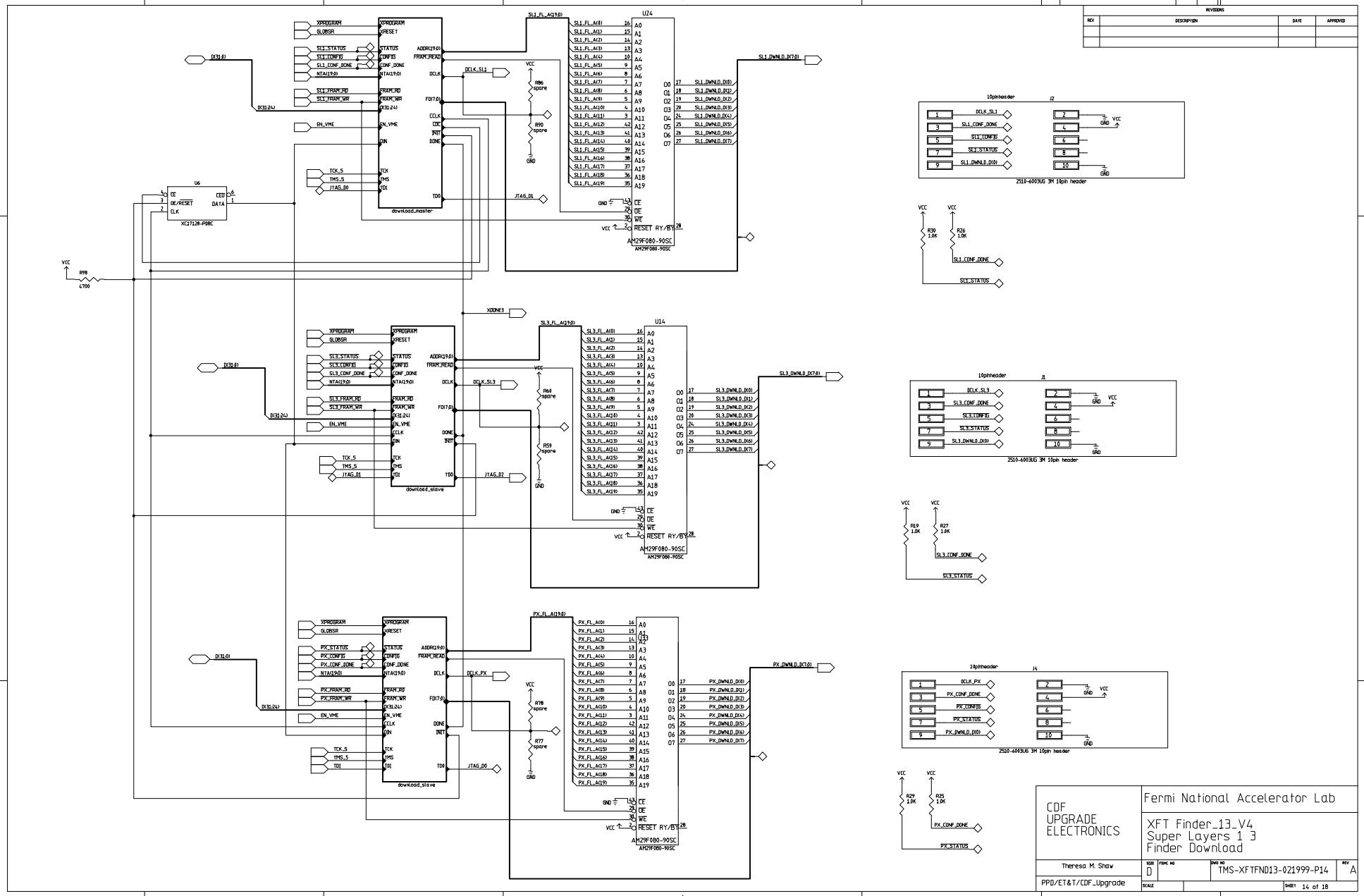
U24
U14
U6
XC17128-PDBC
download_master
download_slave
AM29F080-90SC
10pinheader
J2
J1
J4
2510-6003UG 3M 10pin header
CDF UPGRADE ELECTRONICS
Fermi National Accelerator Lab
XFT Finder_13_V4
Super Layers 1 3
Finder Download
Theresa M. Shaw
PPD/ET&T/CDF_Upgrade
TMS-XFTFND13-021999-P14
A
D
14 of 18