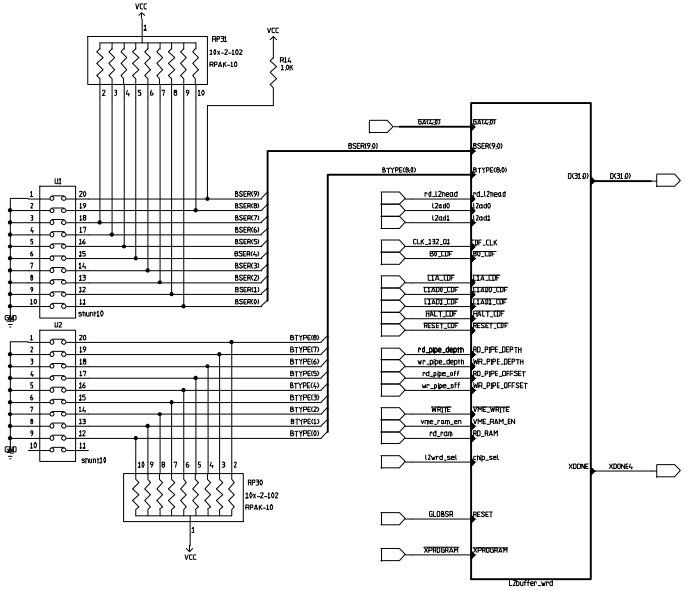

REV	DESCRIPTION	DATE	APPROVED

CDF UPGRADE ELECTRONICS	Fermi National Accelerator Lab	
	XFT Finder_13_V4 Super LAyers 1 3 L2 Header Word	
Theresa M. Shav	SIZE D / FSCM NO / DWG NO TMS-XFTFND13-021999-P15	REV A
PPD/ET&T/CDF_Upgrade	SCALE / SHEET 15 of 18	