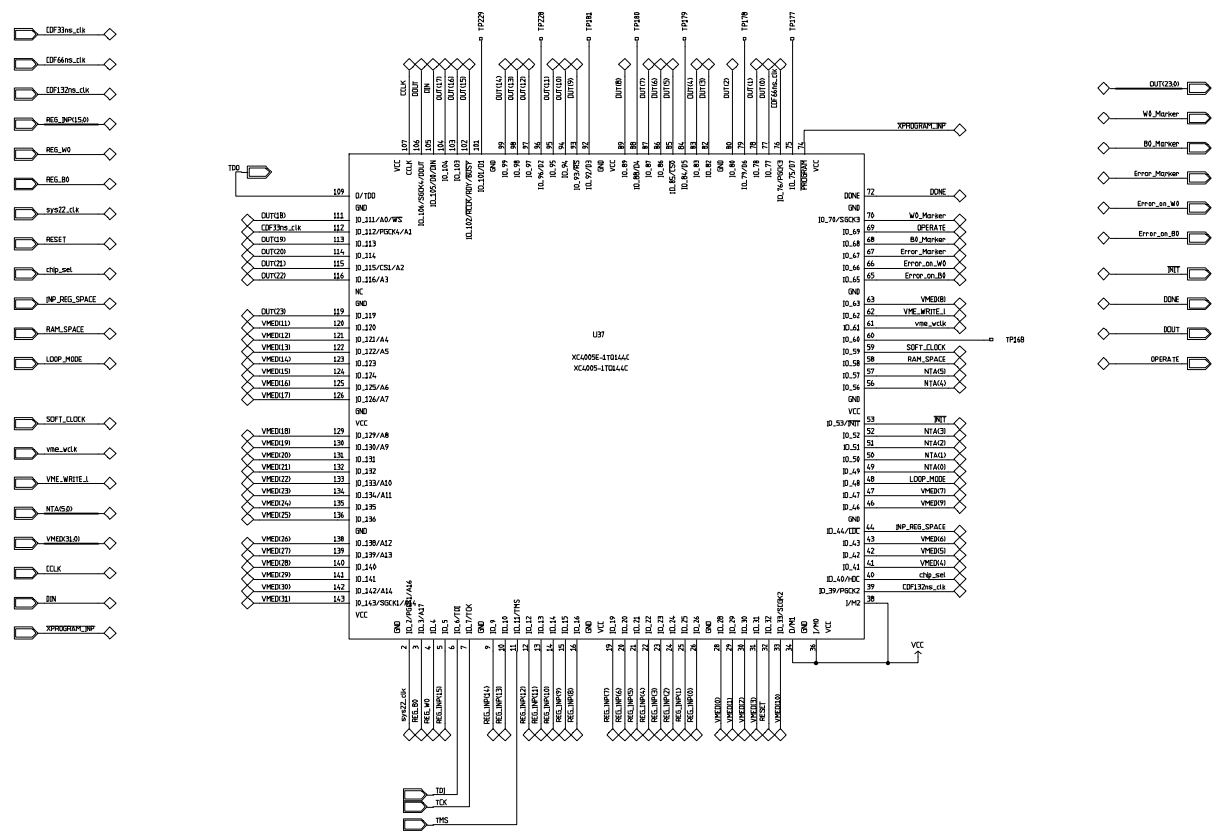

REV	DESCRIPTION	DATE	APPROVED

REVISIONS

CDF
UPGRADE
ELECTRONICS

Fermi National Accelerator Lab

XFT Finder_13_V4 SL3 B
Super Layers 1 3
Alignment Logic - Finder Input

Theresa M. Shaw

PPD/ET&T/CDF_Upgrade

SIZE D | FSMC NO | DWG NO TMS-XFTFND13-021999-P8B | REV A

SCALE | SHEET 1 of 1