DWG NO	SIZE	REV

REVISIONS

REV	DESCRIPTION	DATE	APPROVED

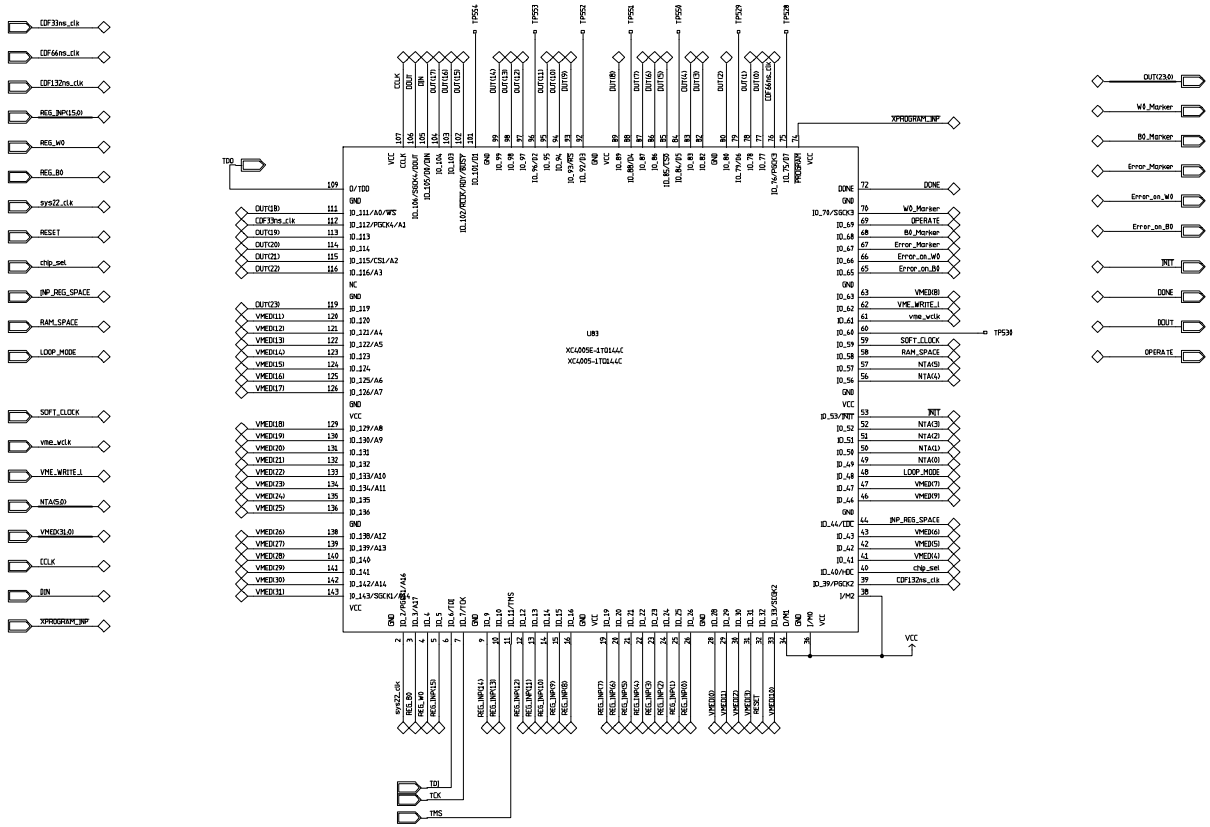

CDF UPGRADE ELECTRONICS	Fermi National Accelerator Lab		
	XFT Finder_13_V4 Super Layers 1 3 Alignment Logic - Finder Input	SL1 +N	
Theresa M. Shav	SIZE D	FSHC NO	DWG NO TMS-XFTFND13-021999-P7E	REV A
PPD/ET&T/CDF_Upgrade	SCALE		SHEET 1 of 1